BID NO: 5/2/2/1/2026-2027 /9 LP

THE APPOINTMENT OF A SERVICE PROVIDER TO SUPPLY, DELIVER AND INSTALLATION OF SCHOOL FURNITURE TO PONTI SECONDARY SCHOOL AND MARETELE SECONDAY SCHOOL IN MAKHUDUMATHAMAGA LOCAL MUNICIPALITY, SEKHUKHUNE DISTRICT LIMPOPO PROVINCE

CLOSING DATE: 17 DECEMBER 2026 @ 11:00

NB: THERE WILL BE NO BRIEFING SESSION.

TECHNICAL ENQUIRIES : Ms Mashela Mokiti
TEL : (015) 495 1073
EMAIL : Mashela.mokiti@dlrrd.gov.za

BID RELATED ENQUIRIES: Ms D Mongwai
TEL : (015) 495 1703
EMAIL : daisy.mongwai@dlrrd.gov.za

FINANCIAL PROPOSAL – PART 1 OF 2

LA 1.1

land reform & rural development
Department:
Land Reform and Rural Development
REPUBLIC OF SOUTH AFRICA

Chief Directorate: Supply Chain and Facilities Management Services: **Sub-Directorate: Demand** and Acquisition Management Services: **Enquiries:** Mr Leshoka Mahloromela: **Tel:** (015) 495 0622

YOU ARE HEREBY INVITED TO BID TO THE DEPARTMENT OF RURAL DEVELOPMENT AND LAND REFORM

BID NUMBER: 5/2/2/1/2026-2027 9LP
CLOSING TIME: 11H00 **CLOSING DATE: 17 DECEMBER 2026**

BIDS RECEIVED AFTER THE CLOSING TIME AND DATE AS A RULE WILL NOT BE ACCEPTED FOR CONSIDERATION

---

1. Kindly furnish us with a bid for services shown on the attached forms.

2. Attached please find the General Contract Conditions (GCC), Authority to sign the Standard Bidding Documents (SBD) on behalf of an entity, Authority of Signatory, SBD1, SBD 3.3, SBD4, SBD6.1, terms of reference.

3. Bidders must ensure that they register with the National Treasury Central Supplier Database (CSD) and attach/provide the reference numbers on the SBD 1 form of the bid document.

4. If you are a sole agent or sole supplier you should indicate your market price after discount to your other clients or if that is not possible your percentage net profit before tax, in order to decide whether the price quoted is fair and reasonable.

5. The attached forms must be completed in detail and returned with your bid. Bid document must be submitted in a sealed envelope stipulating the following information: Name and Address of the bidder, Bid number and closing date of bid. ***(failure to comply will disqualify your proposal)***

Yours faithfully

SIGNED
BIDS MANAGEMENT
DATE: 24 NOVEMBER 2026

LA 1.3

MAP TO BIDDER BOX (B BOX)

5/2/2/1/2026-2027/9LP CLOSING DATE: 17 DECEMBER 2026 @ 11:00

YOU ARE HEREBY INVITED TO BID TO THE GOVERNMENT OF THE REPUBLIC OF SOUTH AFRICA (DEPARTMENT OF AGRICULTURE, LAND REFORM AND RURAL DEVELOPMENT)

BIDS RECEIVED AFTER THE CLOSING TIME AND DATE ARE LATE AND WILL AS A RULE NOT BE ACCEPTED FOR CONSIDERATION.

THE SBD 1 FORM MUST BE SIGNED IN THE ORIGINAL AND WITH BLACK INK

SUBMIT ALL BIDS ON THE OFFICIAL FORMS – DO NOT RETYPE.

The Bid documents must be deposited in the Bid box which is identified as the "Bid/tender box."

DEPARTMENT OF AGRICULTURE, LAND REFORM AND RURAL DEVELOPMENT
Acquisition Management
(BIDS)

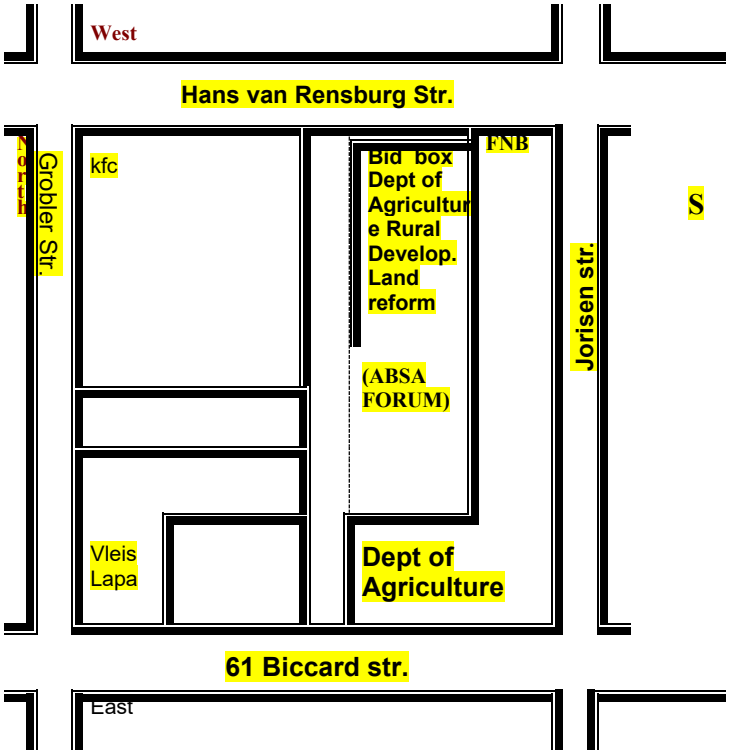

ABSA Building
1ST Floor 70 HANS VAN RENSBURG
POLOKWANE

THE TENDER BOX OF THE OFFICE OF THE DEPARTMENT OF RURAL DEVELOPMENT AND LAND REFORM IS OPEN DURING OFFICE HOURS FROM 08:00 TO 16:30 HRS, 5 DAYS A WEEK. THE BID BOX WILL BE CLOSED AT 11H00 WHICH IS THE CLOSING TIME OF BIDS.

BIDDERS SHOULD ENSURE THAT BIDS ARE DELIVERED TIMEOUSLY TO THE CORRECT
ADDRESS

SUBMIT YOUR BID IN A SEALED ENVELOPE

AUTHORITY TO SIGN THE STANDARD BIDDING DOCUMENTS (SBD) ON BEHALF OF AN ENTITY.

"Only authorized signatories may sign the original and all copies of the tender offer where required.

In the case of a **ONE-PERSON CONCERN** submitting a tender, this shall be clearly stated.

In case of a **COMPANY** submitting a tender, include a copy of a **resolution by its board of directors** authorizing a director or other official of the company to sign the documents on behalf of the company.

In the case of a **CLOSED CORPORATION** submitting a tender, include a copy of a **resolution by its members** authorizing a member or other official of the corporation to sign the documents on each member's behalf.

In the case of a **PARTNERSHIP** submitting a tender, **all the partners sha ll** sign the documents, unless one partner or a group of partners has been authorized to sign on behalf of each partner, in which case **proof of such authorization** shall be included in the Tender.

In the case of a **JOINT VENTURE** submitting a tender, include **a resolution** of each company of the Joint Venture together with a resolution by its members authorizing a member of the Joint Venture to sign the documents on behalf of the Joint Venture."

Accept that failure to submit proof of Authorization to sign the tender shall result in a Tender Offer being regarded as non-responsive.

AUTHORITY OF SIGNATORY

Signatories for companies, closed corporations and partnerships must establish their authority **BY ATTACHING TO THIS FORM, ON THEIR ORGANISATIONS'S LETTERHEAD STATIONERY**, a copy of the relevant resolution by their Board of Directors, Members or Partners, duly signed and dated.

An **EXAMPLE** is shown below for a COMPANY:

MABEL HOUSE (Pty) Ltd

By resolution of the Board of Directors taken on *20 May 2000,*

MR A.F JONES

has been duly authorised to sign all documents in connection with

Contract no CRDP 0006, and any contract which may arise there from,

on behalf of *Mabel House (Pty) Ltd.*

SIGNED ON BEHALF OF THE COMPANY: (Signature of Managing Director)

IN HIS CAPACITY AS: Managing Director

DATE: 20 May 2000

SIGNATURE OF SIGNATORY: (Signature of *A.F Jones)*

As witnesses:

1. . . . . .

2. . . . . .

SAMPLE

Signature of person authorized to sign the tender: . . . . . .

Date: . . . . . .

Annexure A

GOVERNMENT PROCUREMENT

GENERAL CONDITIONS OF CONTRACT
July 2010

NOTES

The purpose of this document is to:

(i) Draw special attention to certain general conditions applicable to government bids, contracts and orders; and

(ii) To ensure that clients be familiar with regard to the rights and obligations of all parties involved in doing business with government.

In this document words in the singular also mean in the plural and vice versa and words in the masculine also mean in the feminine and neuter.

- The General Conditions of Contract will form part of all bid documents and may not be amended.

- Special Conditions of Contract (SCC) relevant to a specific bid, should be compiled separately for every bid (if (applicable) and will supplement the General Conditions of Contract. Whenever there is a conflict, the provisions in the SCC shall prevail.

TABLE OF CLAUSES

1. Definitions
2. Application
3. General
4. Standards
5. Use of contract documents and information; inspection
6. Patent rights
7. Performance security
8. Inspections, tests and analysis
9. Packing
10. Delivery and documents
11. Insurance
12. Transportation
13. Incidental services
14. Spare parts
15. Warranty
16. Payment
17. Prices
18. Contract amendments
19. Assignment
20. Subcontracts
21. Delays in the supplier's performance
22. Penalties
23. Termination for default
24. Dumping and countervailing duties
25. Force Majeure
26. Termination for insolvency
27. Settlement of disputes
28. Limitation of liability
29. Governing language
30. Applicable law
31. Notices
32. Taxes and duties
33. National Industrial Participation Programme (NIPP)
34. Prohibition of restrictive practices

General Conditions of Contract

1. Definitions

1. The following terms shall be interpreted as indicated:

1.1 “Closing time” means the date and hour specified in the bidding documents for the receipt of bids.

1.2 “Contract” means the written agreement entered into between the purchaser and the supplier, as recorded in the contract form signed by the parties, including all attachments and appendices thereto and all documents incorporated by reference therein.

1.3 “Contract price” means the price payable to the supplier under the contract for the full and proper performance of his contractual obligations.

1.4 “Corrupt practice” means the offering, giving, receiving, or soliciting of any thing of value to influence the action of a public official in the procurement process or in contract execution.

1.5 "Countervailing duties" are imposed in cases where an enterprise abroad is subsidized by its government and encouraged to market its products internationally.

1.6 “Country of origin” means the place where the goods were mined, grown or produced or from which the services are supplied. Goods are produced when, through manufacturing, processing or substantial and major assembly of components, a commercially recognized new product results that is substantially different in basic characteristics or in purpose or utility from its components.

1.7 “Day” means calendar day.

1.8 “Delivery” means delivery in compliance of the conditions of the contract or order.

1.9 “Delivery ex stock” means immediate delivery directly from stock actually on hand.

1.10 “Delivery into consignees store or to his site” means delivered and unloaded in the specified store or depot or on the specified site in compliance with the conditions of the contract or order, the supplier bearing all risks and charges involved until the supplies are so delivered and a valid receipt is obtained.

1.11 "Dumping" occurs when a private enterprise abroad market its goods on own initiative in the RSA at lower prices than that of the country of origin and which have the potential to harm the local industries in the RSA.

1.12 ”Force majeure” means an event beyond the control of the supplier and not involving the supplier’s fault or negligence and not foreseeable. Such events may include, but is not restricted to, acts of the purchaser in its sovereign capacity, wars or revolutions, fires, floods, epidemics, quarantine restrictions and freight embargoes.

1.13 “Fraudulent practice” means a misrepresentation of facts in order to influence a procurement process or the execution of a contract to the detriment of any bidder, and includes collusive practice among bidders (prior to or after bid submission) designed to establish bid prices at artificial non-competitive levels and to deprive the bidder of the benefits of free and open competition.

1.14 “GCC” means the General Conditions of Contract.

1.15 “Goods” means all of the equipment, machinery, and/or other materials that the supplier is required to supply to the purchaser under the contract.

1.16 “Imported content” means that portion of the bidding price represented by the cost of components, parts or materials which have been or are still to be imported (whether by the supplier or his subcontractors) and which costs are inclusive of the costs abroad, plus freight and other direct importation costs such as landing costs, dock dues, import duty, sales duty or other similar tax or duty at the South African place of entry as well as transportation and handling charges to the factory in the Republic where the supplies covered by the bid will be manufactured.

1.17 “Local content” means that portion of the bidding price which is not included in the imported content provided that local manufacture does take place.

1.18 “Manufacture” means the production of products in a factory using labour, materials, components and machinery and includes other related value-adding activities.

1.19 “Order” means an official written order issued for the supply of goods or works or the rendering of a service.

1.20 “Project site,” where applicable, means the place indicated in bidding documents.

1.21 “Purchaser” means the organization purchasing the goods.

1.22 “Republic” means the Republic of South Africa.

1.23 “SCC” means the Special Conditions of Contract.

1.24 “Services” means those functional services ancillary to the supply of the goods, such as transportation and any other incidental services, such as installation, commissioning, provision of technical assistance, training, catering, gardening, security, maintenance and other such obligations of the supplier covered under the contract.

1.25 "Written" or "in writing" means handwritten in ink or any form of electronic or mechanical writing.

2. Application

2.1 These general conditions are applicable to all bids, contracts and orders including bids for functional and professional services, sales, hiring, letting and the granting or acquiring of rights, but excluding immovable property, unless otherwise indicated in the bidding documents.

2.2 Where applicable, special conditions of contract are also laid down to cover specific supplies, services or works.

2.3 Where such special conditions of contract are in conflict with these general conditions, the special conditions shall apply.

3. General

3.1 Unless otherwise indicated in the bidding documents, the purchaser shall not be liable for any expense incurred in the preparation and submission of a bid. Where applicable a non-refundable fee for documents may be charged.

3.2 With certain exceptions, invitations to bid are only published in the Government Tender Bulletin. The Government Tender Bulletin may be obtained directly from the Government Printer, Private Bag X85, Pretoria 0001, or accessed electronically from www.treasury.gov.za

4. Standards

4.1 The goods supplied shall conform to the standards mentioned in the bidding documents and specifications.

5. Use of contract documents and information; inspection.

5.1 The supplier shall not, without the purchaser's prior written consent, disclose the contract, or any provision thereof, or any specification, plan, drawing, pattern, sample, or information furnished by or on behalf of the purchaser in connection therewith, to any person other than a person employed by the supplier in the performance of the contract. Disclosure to any such employed person shall be made in confidence and shall extend only so far as may be necessary for purposes of such performance.

5.2 The supplier shall not, without the purchaser's prior written consent, make use of any document or information mentioned in GCC clause 5.1 except for purposes of performing the contract.

5.3 Any document, other than the contract itself mentioned in GCC clause 5.1 shall remain the property of the purchaser and shall be returned (all copies) to the purchaser on completion of the supplier's performance under the contract if so required by the purchaser.

5.4 The supplier shall permit the purchaser to inspect the supplier's records relating to the performance of the supplier and to have them audited by auditors appointed by the purchaser, if so required by the purchaser.

6. Patent rights

6.1 The supplier shall indemnify the purchaser against all third-party claims of infringement of patent, trademark, or industrial design rights arising from use of the goods or any part thereof by the purchaser.

7. Performance

7.1 Within thirty (30) days of receipt of the notification of contract award,

security

the successful bidder shall furnish to the purchaser the performance security of the amount specified in SCC.

7.2 The proceeds of the performance security shall be payable to the purchaser as compensation for any loss resulting from the supplier's failure to complete his obligations under the contract.

7.3 The performance security shall be denominated in the currency of the contract, or in a freely convertible currency acceptable to the purchaser and shall be in one of the following forms:

(a) a bank guarantee or an irrevocable letter of credit issued by a reputable bank located in the purchaser's country or abroad, acceptable to the purchaser, in the form provided in the bidding documents or another form acceptable to the purchaser; or
(b) a cashier's or certified cheque

7.4 The performance security will be discharged by the purchaser and returned to the supplier not later than thirty (30) days following the date of completion of the supplier's performance obligations under the contract, including any warranty obligations, unless otherwise specified in SCC.

8. Inspections, tests and analyses

8.1 All pre-bidding testing will be for the account of the bidder.

8.2 If it is a bid condition that supplies to be produced or services to be rendered should at any stage during production or execution or on completion be subject to inspection, the premises of the bidder or contractor shall be open, at all reasonable hours, for inspection by a representative of the Department or an organization acting on behalf of the Department.

8.3 If there are no inspection requirements indicated in the bidding documents and no mention is made in the contract, but during the contract period it is decided that inspections shall be carried out, the purchaser shall itself make the necessary arrangements, including payment arrangements with the testing authority concerned.

8.4 If the inspections, tests and analyses referred to in clauses 8.2 and 8.3 show the supplies to be in accordance with the contract requirements, the cost of the inspections, tests and analyses shall be defrayed by the purchaser.

8.5 Where the supplies or services referred to in clauses 8.2 and 8.3 do not comply with the contract requirements, irrespective of whether such supplies or services are accepted or not, the cost in connection with these inspections, tests or analyses shall be defrayed by the supplier.

8.6 Supplies and services which are referred to in clauses 8.2 and 8.3 and which do not comply with the contract requirements may be rejected.

8.7 Any contract supplies may on or after delivery be inspected, tested or analyzed and may be rejected if found not to comply with the requirements of the contract. Such rejected supplies shall be held at the

cost and risk of the supplier who shall, when called upon, remove them immediately at his own cost and forthwith substitute them with supplies which do comply with the requirements of the contract. Failing such removal the rejected supplies shall be returned at the suppliers cost and risk. Should the supplier fail to provide the substitute supplies forthwith, the purchaser may, without giving the supplier further opportunity to substitute the rejected supplies, purchase such supplies as may be necessary at the expense of the supplier.

8.8 The provisions of clauses 8.4 to 8.7 shall not prejudice the right of the purchaser to cancel the contract on account of a breach of the conditions thereof, or to act in terms of Clause 23 of GCC.

9. Packing

9.1 The supplier shall provide such packing of the goods as is required to prevent their damage or deterioration during transit to their final destination, as indicated in the contract. The packing shall be sufficient to withstand, without limitation, rough handling during transit and exposure to extreme temperatures, salt and precipitation during transit, and open storage. Packing, case size and weights shall take into consideration, where appropriate, the remoteness of the goods' final destination and the absence of heavy handling facilities at all points in transit.

9.2 The packing, marking, and documentation within and outside the packages shall comply strictly with such special requirements as shall be expressly provided for in the contract, including additional requirements, if any, specified in SCC, and in any subsequent instructions ordered by the purchaser.

10. Delivery and documents

10.1 Delivery of the goods shall be made by the supplier in accordance with the terms specified in the contract. The details of shipping and/or other documents to be furnished by the supplier are specified in SCC.

10.2 Documents to be submitted by the supplier are specified in SCC.

11. Insurance

11.1 The goods supplied under the contract shall be fully insured in a freely convertible currency against loss or damage incidental to manufacture or acquisition, transportation, storage and delivery in the manner specified in the SCC.

12. Transportation

12.1 Should a price other than an all-inclusive delivered price be required, this shall be specified in the SCC.

13. Incidental services

13.1 The supplier may be required to provide any or all of the following services, including additional services, if any, specified in SCC:

(a) performance or supervision of on-site assembly and/or commissioning of the supplied goods;
(b) furnishing of tools required for assembly and/or maintenance of the supplied goods;
(c) furnishing of a detailed operations and maintenance manual for each appropriate unit of the supplied goods;
(d) performance or supervision or maintenance and/or repair of the supplied goods, for a period of time agreed by the parties,

provided that this service shall not relieve the supplier of any warranty obligations under this contract; and

(e) training of the purchaser's personnel, at the supplier's plant and/or on-site, in assembly, start-up, operation, maintenance, and/or repair of the supplied goods.

13.2 Prices charged by the supplier for incidental services, if not included in the contract price for the goods, shall be agreed upon in advance by the parties and shall not exceed the prevailing rates charged to other parties by the supplier for similar services.

14. Spare parts

14.1 As specified in SCC, the supplier may be required to provide any or all of the following materials, notifications, and information pertaining to spare parts manufactured or distributed by the supplier:

(a) such spare parts as the purchaser may elect to purchase from the supplier, provided that this election shall not relieve the supplier of any warranty obligations under the contract; and

(b) in the event of termination of production of the spare parts:

(i) Advance notification to the purchaser of the pending termination, in sufficient time to permit the purchaser to procure needed requirements; and

(ii) following such termination, furnishing at no cost to the purchaser, the blueprints, drawings, and specifications of the spare parts, if requested.

15. Warranty

15.1 The supplier warrants that the goods supplied under the contract are new, unused, of the most recent or current models, and that they incorporate all recent improvements in design and materials unless provided otherwise in the contract. The supplier further warrants that all goods supplied under this contract shall have no defect, arising from design, materials, or workmanship (except when the design and/or material is required by the purchaser's specifications) or from any act or omission of the supplier, that may develop under normal use of the supplied goods in the conditions prevailing in the country of final destination.

15.2 This warranty shall remain valid for twelve (12) months after the goods, or any portion thereof as the case may be, have been delivered to and accepted at the final destination indicated in the contract, or for eighteen (18) months after the date of shipment from the port or place of loading in the source country, whichever period concludes earlier, unless specified otherwise in SCC.

15.3 The purchaser shall promptly notify the supplier in writing of any claims arising under this warranty.

15.4 Upon receipt of such notice, the supplier shall, within the period specified in SCC and with all reasonable speed, repair or replace the defective goods or parts thereof, without costs to the purchaser.

15.5 If the supplier, having been notified, fails to remedy the defect(s) within the period specified in SCC, the purchaser may proceed to take such remedial action as may be necessary, at the supplier's risk and expense and without prejudice to any other rights which the purchaser

may have against the supplier under the contract.

16. Payment

16.1 The method and conditions of payment to be made to the supplier under this contract shall be specified in SCC.

16.2 The supplier shall furnish the purchaser with an invoice accompanied by a copy of the delivery note and upon fulfillment of other obligations stipulated in the contract.

16.3 Payments shall be made promptly by the purchaser, but in no case later than thirty (30) days after submission of an invoice or claim by the supplier.

16.4 Payment will be made in Rand unless otherwise stipulated in SCC.

17. Prices

17.1 Prices charged by the supplier for goods delivered and services performed under the contract shall not vary from the prices quoted by the supplier in his bid, with the exception of any price adjustments authorized in SCC or in the purchaser's request for bid validity extension, as the case may be.

18. Contract amendments

18.1 No variation in or modification of the terms of the contract shall be made except by written amendment signed by the parties concerned.

19. Assignment

19.1 The supplier shall not assign, in whole or in part, its obligations to perform under the contract, except with the purchaser's prior written consent.

20. Subcontracts

20.1 The supplier shall notify the purchaser in writing of all subcontracts awarded under this contracts if not already specified in the bid. Such notification, in the original bid or later, shall not relieve the supplier from any liability or obligation under the contract.

21. Delays in the supplier's performance

21.1 Delivery of the goods and performance of services shall be made by the supplier in accordance with the time schedule prescribed by the purchaser in the contract.

21.2 If at any time during performance of the contract, the supplier or its subcontractor(s) should encounter conditions impeding timely delivery of the goods and performance of services, the supplier shall promptly notify the purchaser in writing of the fact of the delay, its likely duration and its cause(s). As soon as practicable after receipt of the supplier's notice, the purchaser shall evaluate the situation and may at his discretion extend the supplier's time for performance, with or without the imposition of penalties, in which case the extension shall be ratified by the parties by amendment of contract.

21.3 No provision in a contract shall be deemed to prohibit the obtaining of supplies or services from a national department, provincial department, or a local authority.

21.4 The right is reserved to procure outside of the contract small quantities or to have minor essential services executed if an emergency arises, the supplier's point of supply is not situated at or near the place where the supplies are required, or the supplier's services are not readily

available.

21.5 Except as provided under GCC Clause 25, a delay by the supplier in the performance of its delivery obligations shall render the supplier liable to the imposition of penalties, pursuant to GCC Clause 22, unless an extension of time is agreed upon pursuant to GCC Clause 21.2 without the application of penalties.

21.6 Upon any delay beyond the delivery period in the case of a supplies contract, the purchaser shall, without canceling the contract, be entitled to purchase supplies of a similar quality and up to the same quantity in substitution of the goods not supplied in conformity with the contract and to return any goods delivered later at the supplier's expense and risk, or to cancel the contract and buy such goods as may be required to complete the contract and without prejudice to his other rights, be entitled to claim damages from the supplier.

22. Penalties

22.1 Subject to GCC Clause 25, if the supplier fails to deliver any or all of the goods or to perform the services within the period(s) specified in the contract, the purchaser shall, without prejudice to its other remedies under the contract, deduct from the contract price, as a penalty, a sum calculated on the delivered price of the delayed goods or unperformed services using the current prime interest rate calculated for each day of the delay until actual delivery or performance. The purchaser may also consider termination of the contract pursuant to GCC Clause 23.

23. Termination for default

23.1 The purchaser, without prejudice to any other remedy for breach of contract, by written notice of default sent to the supplier, may terminate this contract in whole or in part:

(a) if the supplier fails to deliver any or all of the goods within the period(s) specified in the contract, or within any extension thereof granted by the purchaser pursuant to GCC Clause 21.2;

(b) if the Supplier fails to perform any other obligation(s) under the contract; or

(c) if the supplier, in the judgment of the purchaser, has engaged in corrupt or fraudulent practices in competing for or in executing the contract.

23.2 In the event the purchaser terminates the contract in whole or in part, the purchaser may procure, upon such terms and in such manner as it deems appropriate, goods, works or services similar to those undelivered, and the supplier shall be liable to the purchaser for any excess costs for such similar goods, works or services. However, the supplier shall continue performance of the contract to the extent not terminated.

23.3 Where the purchaser terminates the contract in whole or in part, the purchaser may decide to impose a restriction penalty on the supplier by prohibiting such supplier from doing business with the public sector for a period not exceeding 10 years.

23.4 If a purchaser intends imposing a restriction on a supplier or any person associated with the supplier, the supplier will be allowed a time period of not more than fourteen (14) days to provide reasons why the

envisaged restriction should not be imposed. Should the supplier fail to respond within the stipulated fourteen (14) days the purchaser may regard the intended penalty as not objected against and may impose it on the supplier.

23.5 Any restriction imposed on any person by the Accounting Officer / Authority will, at the discretion of the Accounting Officer / Authority, also be applicable to any other enterprise or any partner, manager, director or other person who wholly or partly exercises or exercised or may exercise control over the enterprise of the first-mentioned person, and with which enterprise or person the first-mentioned person, is or was in the opinion of the Accounting Officer / Authority actively associated.

23.6 If a restriction is imposed, the purchaser must, within five (5) working days of such imposition, furnish the National Treasury, with the following information:

(i) the name and address of the supplier and / or person restricted by the purchaser;
(ii) the date of commencement of the restriction
(iii) the period of restriction; and
(iv) the reasons for the restriction.

These details will be loaded in the National Treasury's central database of suppliers or persons prohibited from doing business with the public sector.

23.7 If a court of law convicts a person of an offence as contemplated in sections 12 or 13 of the Prevention and Combating of Corrupt Activities Act, No. 12 of 2004, the court may also rule that such person's name be endorsed on the Register for Tender Defaulters. When a person's name has been endorsed on the Register, the person will be prohibited from doing business with the public sector for a period not less than five years and not more than 10 years. The National Treasury is empowered to determine the period of restriction and each case will be dealt with on its own merits. According to section 32 of the Act the Register must be open to the public. The Register can be perused on the National Treasury website.

24. Anti-dumping and countervailing duties and rights

24.1 When, after the date of bid, provisional payments are required, or anti-dumping or countervailing duties are imposed, or the amount of a provisional payment or anti-dumping or countervailing right is increased in respect of any dumped or subsidized import, the State is not liable for any amount so required or imposed, or for the amount of any such increase. When, after the said date, such a provisional payment is no longer required or any such anti-dumping or countervailing right is abolished, or where the amount of such provisional payment or any such right is reduced, any such favourable difference shall on demand be paid forthwith by the contractor to the State or the State may deduct such amounts from moneys (if any) which may otherwise be due to the contractor in regard to supplies or services which he delivered or rendered, or is to deliver or render in terms of the contract or any other contract or any other amount which may be due to him

25. Force Majeure

25.1 Notwithstanding the provisions of GCC Clauses 22 and 23, the supplier shall not be liable for forfeiture of its performance security, damages, or termination for default if and to the extent that his delay in performance or other failure to perform his obligations under the contract is the result of an event of force majeure.

25.2 If a force majeure situation arises, the supplier shall promptly notify the purchaser in writing of such condition and the cause thereof. Unless otherwise directed by the purchaser in writing, the supplier shall continue to perform its obligations under the contract as far as is reasonably practical, and shall seek all reasonable alternative means for performance not prevented by the force majeure event.

26. Termination for insolvency

26.1 The purchaser may at any time terminate the contract by giving written notice to the supplier if the supplier becomes bankrupt or otherwise insolvent. In this event, termination will be without compensation to the supplier, provided that such termination will not prejudice or affect any right of action or remedy which has accrued or will accrue thereafter to the purchaser.

27. Settlement of Disputes

27.1 If any dispute or difference of any kind whatsoever arises between the purchaser and the supplier in connection with or arising out of the contract, the parties shall make every effort to resolve amicably such dispute or difference by mutual consultation.

27.2 If, after thirty (30) days, the parties have failed to resolve their dispute or difference by such mutual consultation, then either the purchaser or the supplier may give notice to the other party of his intention to commence with mediation. No mediation in respect of this matter may be commenced unless such notice is given to the other party.

27.3 Should it not be possible to settle a dispute by means of mediation, it may be settled in a South African court of law.

27.4 Mediation proceedings shall be conducted in accordance with the rules of procedure specified in the SCC.

27.5 Notwithstanding any reference to mediation and/or court proceedings herein,

(a) the parties shall continue to perform their respective obligations under the contract unless they otherwise agree; and
(b) the purchaser shall pay the supplier any monies due the supplier.

28. Limitation of liability

28.1 Except in cases of criminal negligence or willful misconduct, and in the case of infringement pursuant to Clause 6;

(a) the supplier shall not be liable to the purchaser, whether in contract, tort, or otherwise, for any indirect or consequential loss or damage, loss of use, loss of production, or loss of profits or interest costs, provided that this exclusion shall not apply to any obligation of the supplier to pay penalties and/or damages to the purchaser; and

(b) the aggregate liability of the supplier to the purchaser, whether under the contract, in tort or otherwise, shall not exceed the total contract price, provided that this limitation shall not apply to the cost of repairing or replacing defective equipment.

29. Governing language

29.1 The contract shall be written in English. All correspondence and other documents pertaining to the contract that is exchanged by the parties shall also be written in English.

30. Applicable law

30.1 The contract shall be interpreted in accordance with South African laws, unless otherwise specified in SCC.

31. Notices

31.1 Every written acceptance of a bid shall be posted to the supplier concerned by registered or certified mail and any other notice to him shall be posted by ordinary mail to the address furnished in his bid or to the address notified later by him in writing and such posting shall be deemed to be proper service of such notice

31.2 The time mentioned in the contract documents for performing any act after such aforesaid notice has been given, shall be reckoned from the date of posting of such notice.

32. Taxes and duties

32.1 A foreign supplier shall be entirely responsible for all taxes, stamp duties, license fees, and other such levies imposed outside the purchaser's country.

32.2 A local supplier shall be entirely responsible for all taxes, duties, license fees, etc., incurred until delivery of the contracted goods to the purchaser.

32.3 No contract shall be concluded with any bidder whose tax matters are not in order. Prior to the award of a bid the Department must be in possession of a tax clearance certificate, submitted by the bidder. This certificate must be an original issued by the South African Revenue Services.

33. National Industrial Participation (NIP) Programme

33.1 The NIP Programme administered by the Department of Trade and Industry shall be applicable to all contracts that are subject to the NIP obligation.

34. Prohibition of Restrictive practices

34.1 In terms of section 4 (1) (b) (iii) of the Competition Act No. 89 of 1998, as amended, an agreement between, or concerted practice by, firms, or a decision by an association of firms, is prohibited if it is between parties in a horizontal relationship and if a bidder (s) is / are or a contractor(s) was / were involved in collusive bidding (or bid rigging).

34.2 If a bidder(s) or contractor(s), based on reasonable grounds or evidence obtained by the purchaser, has / have engaged in the restrictive practice referred to above, the purchaser may refer the matter to the Competition Commission for investigation and possible imposition of administrative penalties as contemplated in the Competition Act No. 89 of 1998.

34.3 If a bidder(s) or contractor(s), has / have been found guilty by the Competition Commission of the restrictive practice referred to above, the purchaser may, in addition and without prejudice to any other remedy provided for, invalidate the bid(s) for such item(s) offered, and / or terminate the contract in whole or part, and / or restrict the bidder(s) or contractor(s) from conducting business with the public sector for a period not exceeding ten (10) years and / or claim damages from the bidder(s) or contractor(s) concerned.

PART A
INVITATION TO BID

YOU ARE HEREBY INVITED TO BID FOR REQUIREMENTS OF THE (*RURAL DEVELOPMENT AND LAND REFORM*)					
BID NUMBER:	**5/2/2/1/2026-2027/9LP**	CLOSING DATE:	**17 DECEMBER 2026**	CLOSING TIME:	**11:00**
DESCRIPTION	**THE APPOINTMENT OF A SERVICE PROVIDER TO SUPPLY, DELIVER AND INSTALLATION OF SCHOOL FURNITURE TO PONTI SECONDARY SCHOOL AND MARETELE SECONDAY SCHOOL IN MAKHUDUMATHAMAGA LOCAL MUNICIPALITY, SEKHUKHUNE DISTRICT LIMPOPO PROVINCE**				

BID RESPONSE DOCUMENTS MAY BE DEPOSITED IN THE BID BOX SITUATED AT *(STREET ADDRESS)*

DEPARTMENT OF AGRICULTURE, LAND REFORM AND RURAL DEVELOPMENT
70 HANS VAN RENSBURG STREET
1ST FLOOR
POLOKWANE

BIDDING PROCEDURE ENQUIRIES MAY BE DIRECTED TO		**TECHNICAL ENQUIRIES MAY BE DIRECTED TO:**	
CONTACT PERSON	Ms Daisy Mongwai	CONTACT PERSON	Mashela Mokiti
TELEPHONE NUMBER	(015) 495 1703	TELEPHONE NUMBER	(015) 495-1073
FACSIMILE NUMBER		FACSIMILE NUMBER	
E-MAIL ADDRESS	daisy.mongwai@dlrrd.gov.za	E-MAIL ADDRESS	mashela.mokiti@dlrrd.gov.za

SUPPLIER INFORMATION

NAME OF BIDDER					
POSTAL ADDRESS					
STREET ADDRESS					
TELEPHONE NUMBER	CODE		NUMBER		
CELLPHONE NUMBER					
FACSIMILE NUMBER	CODE		NUMBER		
E-MAIL ADDRESS					
VAT REGISTRATION NUMBER					
SUPPLIER COMPLIANCE STATUS	TAX COMPLIANCE SYSTEM PIN:		**OR**	CENTRAL SUPPLIER DATABASE No:	MAAA
ARE YOU THE ACCREDITED REPRESENTATIVE IN SOUTH AFRICA FOR THE GOODS /SERVICES /WORKS OFFERED?	☐Yes ☐No [IF YES ENCLOSE PROOF]	ARE YOU A FOREIGN BASED SUPPLIER FOR **THE GOODS /SERVICES /WORKS OFFERED?**		☐Yes ☐No [IF YES, ANSWER THE QUESTIONNAIRE BELOW]	

QUESTIONNAIRE TO BIDDING FOREIGN SUPPLIERS

PART B
TERMS AND CONDITIONS FOR BIDDING

1.	**BID SUBMISSION:**
1.1.	BIDS MUST BE DELIVERED BY THE STIPULATED TIME TO THE CORRECT ADDRESS. LATE BIDS WILL NOT BE ACCEPTED FOR CONSIDERATION.
1.2.	**ALL BIDS MUST BE SUBMITTED ON THE OFFICIAL FORMS PROVIDED–(NOT TO BE RE-TYPED) OR IN THE MANNER PRESCRIBED IN THE BID DOCUMENT.**
1.3.	THIS BID IS SUBJECT TO THE PREFERENTIAL PROCUREMENT POLICY FRAMEWORK ACT, 2000 AND THE PREFERENTIAL PROCUREMENT REGULATIONS, 2017, THE GENERAL CONDITIONS OF CONTRACT (GCC) AND, IF APPLICABLE, ANY OTHER SPECIAL CONDITIONS OF CONTRACT.
1.4.	**THE SUCCESSFUL BIDDER WILL BE REQUIRED TO FILL IN AND SIGN A WRITTEN CONTRACT FORM (SBD7).**
2.	**TAX COMPLIANCE REQUIREMENTS**
2.1	BIDDERS MUST ENSURE COMPLIANCE WITH THEIR TAX OBLIGATIONS.
2.2	BIDDERS ARE REQUIRED TO SUBMIT THEIR UNIQUE PERSONAL IDENTIFICATION NUMBER (PIN) ISSUED BY SARS TO ENABLE THE ORGAN OF STATE TO VERIFY THE TAXPAYER'S PROFILE AND TAX STATUS.
2.3	APPLICATION FOR TAX COMPLIANCE STATUS (TCS) PIN MAY BE MADE VIA E-FILING THROUGH THE SARS WEBSITE WWW.SARS.GOV.ZA.
2.4	BIDDERS MAY ALSO SUBMIT A PRINTED TCS CERTIFICATE TOGETHER WITH THE BID.
2.5	IN BIDS WHERE CONSORTIA / JOINT VENTURES / SUB-CONTRACTORS ARE INVOLVED, EACH PARTY MUST SUBMIT A SEPARATE TCS CERTIFICATE / PIN / CSD NUMBER.
2.6	WHERE NO TCS PIN IS AVAILABLE BUT THE BIDDER IS REGISTERED ON THE CENTRAL SUPPLIER DATABASE (CSD), A CSD NUMBER MUST BE PROVIDED.
2.7	NO BIDS WILL BE CONSIDERED FROM PERSONS IN THE SERVICE OF THE STATE, COMPANIES WITH DIRECTORS WHO ARE PERSONS IN THE SERVICE OF THE STATE, OR CLOSE CORPORATIONS WITH MEMBERS PERSONS IN THE SERVICE OF THE STATE."

NB: FAILURE TO PROVIDE / OR COMPLY WITH ANY OF THE ABOVE PARTICULARS MAY RENDER THE BID INVALID.

SIGNATURE OF BIDDER: ……

CAPACITY UNDER WHICH THIS BID IS SIGNED: ……
(Proof of authority must be submitted e.g. company resolution)

DATE: ……...

BID NO:5/2/2/1/2026-2027/9LP

THE APPOINTMENT OF A SERVICE PROVIDER TO SUPPLY, DELIVER AND INSTALLATION OF SCHOOL FURNITURE TO PONTI SECONDARY SCHOOL AND MARETELE SECONDAY SCHOOL IN MAKHUDUMATHAMAGA LOCAL MUNICIPALITY, SEKHUKHUNE DISTRICT LIMPOPO PROVINCE

CLOSING DATE: 17 DECEMBER 2026 @ 11:00

NB: THERE WILL BE NO BRIEFING SESSION.

TECHNICAL ENQUIRIES : Ms Mashela Mokiti
TEL : (015) 495 1073
EMAIL : Mashela.mokiti@dlrrd.gov.za

BID RELATED ENQUIRIES: Ms Daisy Mongwai
TEL : (015) 495 1703
EMAIL : daisy.mongwai@dlrrd.gov.za

FINANCIAL PROPOSAL – PART 2 OF 2

Bid No.: ……

Name of Bidder: ……

SBD 3.3

PRICING SCHEDULE

land reform & rural development
Department:
Land Reform and Rural Development
REPUBLIC OF SOUTH AFRICA

(Professional Services)

NAME OF BIDDER	BID NO.: 5/2/2/1/2026-2027/9LP
CLOSING TIME 11:00	CLOSING DATE: 17 DECEMBER 2026

OFFER TO BE VALID FOR ..... DAYS FROM THE CLOSING DATE OF BID.

ITEM NO	DESCRIPTION	BID PRICE IN RSA CURRENCY **(ALL APPLICABLE TAXES INCLUDED)

R……

No.	ITEMS DESCRITION	QUANTITY	UNIT PRICE	TOTAL
1.	**LEANERS SINGLE COMBINATION DESKS (as per Paragraph 4.1)**	1111		
2.	**TEACHERS DESK (as per Paragraph 4.2)**	34		
3.	**TEACHERS CHAIRS (as per Paragraph 4.3)**	34		
4.	**LOCKABLE WOODEN CABINETS (as per Paragraph 4.4)**	30		
	VAT (if applicable)			
	Total bid price (inclusive of all applicable expenses)			

Any enquiries regarding bidding procedures may be directed to the –

Department of Land Reform and Rural Development
ABSA Building
70 Hans van Rensburg Street
Polokwane
0699

Daisy Mongwai

Tel: (015) 495 1703

Or for technical information –

Ms Mashela Mokiti

Tel: (015) 495 1073

BIDDER'S DISCLOSURE

1. PURPOSE OF THE FORM

Any person (natural or juristic) may make an offer or offers in terms of this invitation to bid. In line with the principles of transparency, accountability, impartiality, and ethics as enshrined in the Constitution of the Republic of South Africa and further expressed in various pieces of legislation, it is required for the bidder to make this declaration in respect of the details required hereunder.

Where a person/s are listed in the Register for Tender Defaulters and / or the List of Restricted Suppliers, that person will automatically be disqualified from the bid process.

2. Bidder's declaration

2.1 Is the bidder, or any of its directors / trustees / shareholders / members / partners or any person having a controlling interest1 in the enterprise, employed by the state? **YES/NO**

2.1.1 If so, furnish particulars of the names, individual identity numbers, and, if applicable, state employee numbers of sole proprietor/ directors / trustees / shareholders / members/ partners or any person having a controlling interest in the enterprise, in table below.

Full Name	**Identity Number**	**Name of State institution**

2.2 Do you, or any person connected with the bidder, have a relationship

1 the power, by one person or a group of persons holding the majority of the equity of an enterprise, alternatively, the person/s having the deciding vote or power to influence or to direct the course and decisions of the enterprise.

with any person who is employed by the procuring institution? **YES/NO**

2.2.1 If so, furnish particulars:
……
……

2.3 Does the bidder or any of its directors / trustees / shareholders / members / partners or any person having a controlling interest in the enterprise have any interest in any other related enterprise whether or not they are bidding for this contract? **YES/NO**

2.3.1 If so, furnish particulars:
……
……

3 DECLARATION

I, the undersigned, (name)……. in submitting the accompanying bid, do hereby make the following statements that I certify to be true and complete in every respect:

3.1 I have read and I understand the contents of this disclosure;
3.2 I understand that the accompanying bid will be disqualified if this disclosure is found not to be true and complete in every respect;
3.3 The bidder has arrived at the accompanying bid independently from, and without consultation, communication, agreement or arrangement with any competitor. However, communication between partners in a joint venture or consortium2 will not be construed as collusive bidding.
3.4 In addition, there have been no consultations, communications, agreements or arrangements with any competitor regarding the quality, quantity, specifications, prices, including methods, factors or formulas used to calculate prices, market allocation, the intention or decision to submit or not to submit the bid, bidding with the intention not to win the bid and conditions or delivery particulars of the products or services to which this bid invitation relates.
3.4 The terms of the accompanying bid have not been, and will not be, disclosed by the bidder, directly or indirectly, to any competitor, prior to the date and time of the official bid opening or of the awarding of the contract.

3.5 There have been no consultations, communications, agreements or arrangements made by the bidder with any official of the procuring

2 Joint venture or Consortium means an association of persons for the purpose of combining their expertise, property, capital, efforts, skill and knowledge in an activity for the execution of a contract.

institution in relation to this procurement process prior to and during the bidding process except to provide clarification on the bid submitted where so required by the institution; and the bidder was not involved in the drafting of the specifications or terms of reference for this bid.

3.6 I am aware that, in addition and without prejudice to any other remedy provided to combat any restrictive practices related to bids and contracts, bids that are suspicious will be reported to the Competition Commission for investigation and possible imposition of administrative penalties in terms of section 59 of the Competition Act No 89 of 1998 and or may be reported to the National Prosecuting Authority (NPA) for criminal investigation and or may be restricted from conducting business with the public sector for a period not exceeding ten (10) years in terms of the Prevention and Combating of Corrupt Activities Act No 12 of 2004 or any other applicable legislation.

I CERTIFY THAT THE INFORMATION FURNISHED IN PARAGRAPHS 1, 2 and 3 ABOVE IS CORRECT.
I ACCEPT THAT THE STATE MAY REJECT THE BID OR ACT AGAINST ME IN TERMS OF PARAGRAPH 6 OF PFMA SCM INSTRUCTION 03 OF 2021/22 ON PREVENTING AND COMBATING ABUSE IN THE SUPPLY CHAIN MANAGEMENT SYSTEM SHOULD THIS DECLARATION PROVE TO BE FALSE.

…… ……
Signature Date

…… ……
Position Name of bidder

PREFERENCE POINTS CLAIM FORM IN TERMS OF THE PREFERENTIAL PROCUREMENT REGULATIONS 2022

BID PROCESS (EQUAL OR BELOW R 50 MILLION)

This preference form must form part of all tenders invited. It contains general information and serves as a claim form for preference points for specific goals.

NB: BEFORE COMPLETING THIS FORM, TENDERERS MUST STUDY THE GENERAL CONDITIONS, DEFINITIONS AND DIRECTIVES APPLICABLE IN RESPECT OF THE TENDER AND PREFERENTIAL PROCUREMENT REGULATIONS, 2022

---

1. DEFINITIONS

(a) **"tender"** means a written offer in the form determined by an organ of state in response to an invitation to provide goods or services through price quotations, competitive tendering process or any other method envisaged in legislation;

(b) **"price"** means an amount of money tendered for goods or services, and includes all applicable taxes less all unconditional discounts;

(c) **"rand value"** means the total estimated value of a contract in Rand, calculated at the time of tender invitation, and includes all applicable taxes;

(d) **"tender for income-generating contracts"** means a written offer in the form determined by an organ of state in response to an invitation for the origination of income-generating contracts through any method envisaged in legislation that will result in a legal agreement between the organ of state and a third party that produces revenue for the organ of state, and includes, but is not limited to, leasing and disposal of assets and concession contracts, excluding direct sales and disposal of assets through public auctions;

(e) **"the Act"** means the Preferential Procurement Policy Framework Act, 2000 (Act No. 5 of 2000); and

(f) "Historically Disadvantaged individuals" means a person historically disadvantaged by unfair discrimination on the basis of race: Provided that a person historically disadvantaged on the basis of race refers to Africans, Coloureds, Indians and people of Chinese descent who are South African citizens by birth or descent; or who became citizens of the Republic of South Africa by Naturalisation -

- Before 27 April 1994; or
- On or after 27 April 1994 and who would have been entitled to acquire citizenship by naturalization prior to that date.

2. GENERAL CONDITIONS

2.1 The following preference point systems are applicable to invitations to tender:

- the 80/20 system for requirements with a Rand value of up to R50 000 000 (all applicable taxes included); and

2.2 **To be completed by the organ of state**

a) The applicable preference point system for this tender is the 80/20 preference point system.

b) 80/20 preference point system will be applicable in this tender. The lowest/ highest acceptable tender will be used to determine the accurate system once tenders are received.

2.3 Points for this tender (even in the case of a tender for income-generating contracts) shall be awarded for:

(a) Price; and

(b) Specific Goals.

2.4 **To be completed by the organ of state:**

The maximum points for this tender are allocated as follows:

	POINTS
PRICE	80
SPECIFIC GOALS	20
Total points for Price and SPECIFIC GOALS	**100**

2.5 Failure on the part of a tenderer to submit proof or documentation required in terms of this tender to claim points for specific goals with the tender, will be interpreted to mean that preference points for specific goals are not claimed.

2.6 Tenderers that fail to claim points for specific goals or that fail to fully complete the table in paragraph 2.12 below, will not be awarded points for specific goals.

2.7 Tenderers that make a calculation error when claiming points as per the table in paragraph 2.12 below, will not be awarded points for specific goals. Please take note of the examples on how to calculate points for specific goals as per paragraph 2.12 below.

2.8 Tenderers that fail to submit the correct SBD 6.1 form as issued by the Department of Agriculture, Land Reform and Rural Development, will not be awarded points for specific goals.

2.9 The organ of state reserves the right to require of a tenderer, either before a tender is adjudicated or at any time subsequently, to substantiate any claim in regard to preferences, in any manner required by the organ of state.

2.10 Tenderers who wish to claim points in terms of the table in paragraph 2.12 below need to provide proof for each point claimed as guided below:

2.10.1 Historically Disadvantaged individuals (HDI):

- **Attach a copy of Identity Document (ID) and company registration document.**

2.10.2 Who is female:

- **Attach a copy of Identity Document (ID) and company registration document.**

2.10.3 Who has a disability:

- **Attach a certified copy or original doctor's letter confirming the disability.**

2.10.4 Who is youth (a person that is not older than 35 years on the closing date of a bid):

- **Attach a copy of Identity Document (ID) and company registration document.**

2.10.5 Specific goal: Locality – **Attach**

- a **valid** municipal services account (water, sanitation, rates and electricity) in the name of the bidder/s or active director/s **or**
- a valid lease agreement from the lessor or
- a letter on the letterhead of the ward councillor/traditional authority/council that must be signed, stamped and dated

2.11 The Department will use the Central Supplier Database and documents submitted by the tenderer to verify the points claimed for specific goals.

2.12 **Specific goals for the tender and points claimed are indicated per the table below.**

(Note to organs of state: Where either the 90/10 or 80/20 preference point system is applicable, corresponding points must also be indicated as such.

Note to tenderers: The tenderer must indicate how they claim points for each preference point system.)

The specific goals allocated points in terms of this tender	Number of points allocated (80/20 system)	Percentage ownership equity (To be completed by the tenderer)	Number of points claimed (80/20 system) (To be completed by the tenderer)
I. HDI	8		
II. Who is female	5		
iii. Who has disability	2		
iv. Who is youth	2		
v. Locality	3		

The number of points claimed for specific goals, are calculated as follow:

(i) A maximum of 8 points may be allocated to tenderers who had no franchise in national elections before the 1983 and 1993 Constitution, on the following basis:
Percentage ownership equity x 8 ÷ 100 = number of points claimed.

(ii) A maximum of 5 points may be allocated for to tenderers who is female, on the following basis:
Percentage ownership equity x 5 ÷ 100 = number of points claimed.

(iii) A maximum of 2 points may be allocated to tenderers who has a disability, on the following basis:
Percentage ownership equity x 2 ÷ 100 = number of points claimed.

(iv) A maximum of 2 points may be allocated to tenderers who are youth, on the following basis:
Percentage ownership equity x 2 ÷ 100 = number of points claimed.

(v) A maximum of 3 points may be allocated to tenderers for locality, on the following basis:
Percentage ownership equity x 3 ÷ 100 = number of points claimed.

2.13 It is important to note that failure by a tenderer to complete the table in paragraph 2.12 in full, will result in points for specific goals not to be allocated.

3. FORMULAE FOR PROCUREMENT OF GOODS AND SERVICES

3.1. POINTS AWARDED FOR PRICE

3.1.1 THE 80/20 PREFERENCE POINT SYSTEMS

A maximum of 80 points is allocated for price on the following basis:

80/20

$$Ps = 80\left(1 - \frac{Pt - P\,min}{P\,min}\right)$$

Where

Ps = Points scored for price of tender under consideration

Pt = Price of tender under consideration

Pmin = Price of lowest acceptable tender

3.2. **FORMULAE FOR DISPOSAL OR LEASING OF STATE ASSETS AND INCOME GENERATING PROCUREMENT**

3.2.1. **POINTS AWARDED FOR PRICE**

A maximum of 80 points is allocated for price on the following basis:

80/20

$$Ps = 80\left(1 + \frac{Pt - P\,max}{P\,max}\right)$$

Where

Ps = Points scored for price of tender under consideration

Pt = Price of tender under consideration

Pmax = Price of highest acceptable tender

4. POINTS AWARDED FOR SPECIFIC GOALS

4.1. In terms of Regulation 4(2); 5(2); 6(2) and 7(2) of the Preferential Procurement Regulations, preference points must be awarded for specific goals stated in the tender. For the purposes of this tender the tenderer will be allocated points based on the goals stated in the table in paragraph 2.12 above as may be supported by proof/ documentation stated in the conditions of this tender.

4.2. In cases where organs of state intend to use Regulation 3(2) of the Regulations, which states that, if it is unclear whether the 80/20 or 90/10 preference point system applies, an organ of state must, in the tender documents, stipulate in the case of—

(a) an invitation for tender for income-generating contracts, that either the 80/20 or 90/10 preference point system will apply and that the highest acceptable tender will be used to determine the applicable preference point system; or

(b) any other invitation for tender, that either the 80/20 or 90/10 preference point system will apply and that the lowest acceptable tender will be used to determine the applicable preference point system,

then the organ of state must indicate the points allocated for specific goals for both the 90/10 and 80/20 preference point system.

4.3 A consortium or joint venture may, based on the percentage of the contract value managed or executed by their members, be entitled to claim points in respect of specific contract participation goals.

4.4 A tenderer will not be awarded points for HDI if it is indicated in the tender documents that such a tenderer intends sub-contracting more than 25% of the value of the contract to any other enterprise that does not qualify for the same number or more points for equity ownership.

4.5 A tenderer awarded a contract as a result of preference for contracting with, or providing equity ownership to a HDI, may not subcontract more than 25% of the value of the contract to a tenderer who is not a HDI or does not qualify for the same number or more preference for equity ownership.

5. SUB-CONTRACTING

5.1 Will any portion of the contract be sub-contracted?
(***Tick applicable box***)

YES		NO	

5.1.1 If yes, indicate:

i) What percentage of the contract will be subcontracted: ...……%

ii) The name of the sub-contractor: ……..

iii) Points claimed for HDI by the sub-contractor: .....……..

6. DECLARATION WITH REGARD TO COMPANY/FIRM

6.1. Name of company/firm: ……...

6.2. Company registration number: …….....

6.3. TYPE OF COMPANY/ FIRM

- ϒ Partnership/Joint Venture / Consortium
- ϒ One-person business/sole propriety
- ϒ Close corporation
- ϒ Public Company
- ϒ Personal Liability Company
- ϒ (Pty) Limited
- ϒ Non-Profit Company
- ϒ State Owned Company

[TICK APPLICABLE BOX]

6.4. I, the undersigned, who is duly authorised to do so on behalf of the company/firm, certify that the points claimed, based on the specific goals as advised in the tender, qualifies the company/ firm for the preference(s) shown and I acknowledge that:

i) The information furnished is true and correct;

ii) The preference points claimed are in accordance with the General Conditions as indicated in paragraph 1 of this form;

iii) In the event of a contract being awarded as a result of points claimed as shown in paragraphs 1.4 and 4.2, the contractor may be required to furnish documentary proof to the satisfaction of the organ of state that the claims are correct;

iv) If the specific goals have been claimed or obtained on a fraudulent basis or any of the conditions of contract have not been fulfilled, the organ of state may, in addition to any other remedy it may have –

(a) disqualify the person from the tendering process;

(b) recover costs, losses or damages it has incurred or suffered as a result of that person's conduct;

(c) cancel the contract and claim any damages which it has suffered as a result of having to make less favourable arrangements due to such cancellation;

(d) recommend that the tenderer or contractor, its shareholders and directors, or only the shareholders and directors who acted on a fraudulent basis, be restricted from obtaining business from any organ of state for a period not exceeding 10 years, after the *audi alteram partem* (hear the other side) rule has been applied; and

(e) forward the matter for criminal prosecution, if deemed necessary.

.....
SIGNATURE(S) OF TENDERER(S)

SURNAME AND NAME: .....

DATE: .....

ADDRESS: .....

.....

CONTRACT FORM - RENDERING OF SERVICES

THIS FORM MUST BE FILLED IN DUPLICATE BY BOTH THE SERVICE PROVIDER (PART 1) AND THE PURCHASER (PART 2). BOTH FORMS MUST BE SIGNED IN THE ORIGINAL SO THAT THE SERVICE PROVIDER AND THE PURCHASER WOULD BE IN POSSESSION OF ORIGINALLY SIGNED CONTRACTS FOR THEIR RESPECTIVE RECORDS.

PART 1 (TO BE FILLED IN BY THE SERVICE PROVIDER)

1. I hereby undertake to render services described in the attached bidding documents to (name of the institution)……. in accordance with the requirements and task directives / proposals specifications stipulated in Bid Number…….…….. at the price/s quoted. My offer/s remain binding upon me and open for acceptance by the Purchaser during the validity period indicated and calculated from the closing date of the bid .

2. The following documents shall be deemed to form and be read and construed as part of this agreement:

   (i) Bidding documents, *viz*
   - Invitation to bid;
   - Tax clearance certificate;
   - Pricing schedule(s);
   - Filled in task directive/proposal;
   - Preference claims for Broad Based Black Economic Empowerment Status Level of Contribution in terms of the Preferential Procurement Regulations 2011;
   - Declaration of interest;
   - Declaration of bidder's past SCM practices;
   - Certificate of Independent Bid Determination;
   - Special Conditions of Contract;

   (ii) General Conditions of Contract; and
   (iii) Other (specify)

3. I confirm that I have satisfied myself as to the correctness and validity of my bid; that the price(s) and rate(s) quoted cover all the services specified in the bidding documents; that the price(s) and rate(s) cover all my obligations and I accept that any mistakes regarding price(s) and rate(s) and calculations will be at my own risk.

4. I accept full responsibility for the proper execution and fulfilment of all obligations and conditions devolving on me under this agreement as the principal liable for the due fulfillment of this contract.

5. I declare that I have no participation in any collusive practices with any bidder or any other person regarding this or any other bid.

6. I confirm that I am duly authorised to sign this contract.

NAME (PRINT) …….

CAPACITY …….

SIGNATURE …….

NAME OF FIRM …….

DATE …….

WITNESSES

1 ……..…….

2 ……..…….

DATE: ……..

SBD 7.2

CONTRACT FORM - RENDERING OF SERVICES

PART 2 (TO BE FILLED IN BY THE PURCHASER)

1. I……. in my capacity as……...…….. accept your bid under reference number ……dated……for the rendering of services indicated hereunder and/or further specified in the annexure(s).

2. An official order indicating service delivery instructions is forthcoming.

3. I undertake to make payment for the services rendered in accordance with the terms and conditions of the contract, within 30 (thirty) days after receipt of an invoice.

DESCRIPTION OF SERVICE	PRICE (ALL APPLICABLE TAXES INCLUDED)	COMPLETION DATE	B-BBEE STATUS LEVEL OF CONTRIBUTION	MINIMUM THRESHOLD FOR LOCAL PRODUCTION AND CONTENT (if applicable)

4. I confirm that I am duly authorised to sign this contract.

SIGNED AT ……ON……..

NAME (PRINT) …….

SIGNATURE ……

OFFICIAL STAMP

WITNESSES

1 ….…….

2 …..…….

DATE: ……...

land reform & rural development
Department:
Land Reform and Rural Development
REPUBLIC OF SOUTH AFRICA

LIMPOPO PROVINCIAL SHARED SERVICE CENTRE: RURAL INFRASTRUCTURE DEVELOPMENT
Private Bag X9312, Polokwane, 0700; 70 Hans Van Rensburg, Polokwane, 0700
Tel: 015 – 230 5034; E-mail: mashela.mokiti@dlrrd.gov.za Website: www.dlrrd.gov.za

SPECIFICATION FOR THE SUPPLY, DELIVERY AND INSTALLATION OF SCHOOL FURNITURE AT PONTI SECONDARY SCHOOL AND MARETELE SECONDARY SCHOOL SITUATED IN MAKHUDUTHAMAGA LOCAL MUNICIPALITY, SEKHUKHUNE DISTRICT, LIMPOPO PROVINCE.

Document detail	Description
Procuring department	Department of Land Reform and Rural Development
Project	Improving of Rural Learning Environment Initiative
Delivery sites	Ponti Secondary School and Maretele Secondary School
Furniture categories	Learner desks and chairs; teacher tables and chairs; lockable cabinets

1. PURPOSE

1.1 The purpose of this specification is to define the minimum technical, quality, delivery and installation requirements for the supply, delivery and installation of school furniture at Ponti Secondary School and Maretele Secondary School

2. BACKGROUND

2.1 The appointed service provider will be required to manufacture/source where applicable, supply, transport, off-load, assemble, install and position the furniture at the two schools in accordance with the quantities and requirements set out below.

3. SCOPE OF WORK

No	Furniture item	Ponti Secondary School	Maretele Secondary School	Total Quantity
1.	Leaners single combination desks	886	225	1111
2.	Teacher tables	27	7	34
3.	Teachers' chairs	27	7	34
4.	Lockable wooden cabinets	20	10	30

4. MINIMUM TECHNICAL REQUIREMENTS

4.1 LEANERS SINGLE COMBINATION DESKS (Please see attached **Annexure A** for **dimensions** and **picture**)

4.1.1 Leaners desks must be new, durable and suitable for classroom and administrative use.

4.1.2 Each desk must have a sturdy and stable frame and a hard-wearing, smooth, easy-to-clean worktop.

4.1.3 The desks must provide adequate working space for teaching materials, documents ad ordinary classroom work.

4.1.4 The desk must have properly finished edges and corners, and must not have sharp exposed components.

4.1.5 Top front slat, back, slat manufactured from 21mm solid saligna, hardwood (eucalyptus grandls).

4.1.6 Main steel frame ø31.7x.6mm tubing.

4.1.7 Seat support rail ø15.05x1.2mm tubing.

4.1.8 Seat ø15.88x1.2mm tubing complete steel frame baked light grey epoxy/polyester powder coating finish.

4.1.9 Durable plugs fitted on all open ends.

4.1.10 All timber component to be varnished with two coats of acid catalysed ladouer.

4.1.11 Fit all timber components to steel frame with approved m5/m5 bolts and mylock nuts.

4.1.12 Desk must comply with sans 880:2004 (edition 3.2).

4.2 TEACHERS TABLES (Please see attached **Annexure B** for **dimensions** and **picture**)

4.2.1 Teacher tables must be new, durable and suitable for classroom and administrative use.

4.2.2 Each table must have a sturdy and stable frame and a hard-wearing, smooth, easy-to-clean worktop.

4.2.3 The table must provide adequate working space for teaching materials, documents and ordinary classroom work with two lockable shelves.

4.2.4 The table must have properly finished edges and corners and must not have exposed sharp components.

4.2.5 Metal frames must be corrosion-resistant.

4.2.6 Table top – 21mm solid hardwood,

4.2.7 Modesty panel and drawer box carcass manufactured from matching 16mm substrate veneer board all edges sealed with matching veneer.

4.2.8 32x1.6mm square tubing frame with baked black epoxy/polyester powder coating finish.

4.2.9 Durable plugs fitted to all legs ends.

4.2.10 21mm solid saligna hardwood drawer fronts, top drawer lockable (approved lock).

4.2.11 Approved handle and drawer slides.

4.2.12 Knock-down “prisma” fitting.

4.2.13 Modesty panel to be secured to steel frame with 4.8x27mm large flange pop revets.

4.2.14 All timber components to be varbished with two coats of acd catalyzed lacquer.

4.2.15 Fit top to steel frame with approved screws.

4.2.16 Desk must comply with sabs 1528-2:1998 (edition 1.1)

4.3 TECHERS CHAIRS (Please see attached **Annexure C** for **dimensions** and **picture**)

4.3.1 Teacher chairs must be new and designed for comfortable and regular classroom/office use.

4.3.2 Each chair must have a stable base or frame, supportive backrest and suitable seat height.

4.3.3 Seat and backrest materials must be durable, easy to clean and suitable for frequent use.

4.3.4 All moving or adjustable components, where provided, must operate properly and be securely fitted.

4.3.5 Seat and back approved foam [seat (50mm thick) minimum] 23kg/m3; back (40mm thick) minimum 16kg/m3] and upholstery (100% polypropylene – contract quality) foam to be glued onto +/- 11mm shaped plywood seat and back.

4.3.6 Steel frame; ø25.4 x 1.6mm tubing with baked black epoxy/polyester powder coating finish.

4.3.7 Durable plugs fitted to all open steel ends.

4.3.8 Approved arm rests to be fitted to steel frame.

4.3.9 Seat fitted with bolts & t-nuts to steel frame.

4.3.10 Back fitted with bolts & t-nuts to steel frame.

4.3.11 Swivel & tilt mechanism.

4.3.12 Gas height adjustable spindle.

4.3.13 Five (5) star reinforce nylon base with durable castors.

4.3.14 Chair to comply with sabs1528-1;1992

4.4 LOCKABLE WOODEN CABINETS (Please see attached **Annexure D** for **dimensions** and **picture**)

4.4.1 Cabinets must be new, lockable storage cabinets suitable for storing school records, stationery and equipment.

4.4.2 Each cabinet must be fitted with a functional locking mechanism and supplied with keys. The lock must secure the cabinet doors properly.

4.4.3 Cabinets must have internal shelves suitable for ordinary school files and equipment. Bidders must specify the number of shelves and the load capacity per shelf.

4.4.4 Cabinet doors must open and close smoothly and must be properly aligned. All edges must be finished to prevent injury.

4.4.5 Carcass (top, bottom, doors, sides and shelves) manufacturing from 16mm double melamine faced (natural oak) particle board. All edges sealed with matching pvc edging.

4.4.6 Back (grooved and glued in) manufactured from 12mm double sided melamine faced (natural oak) particle board.

4.4.7 Approved solid oak cup handle.

4.4.8 Approved adjustable feet.

4.4.9 Approved concealed hinges.

4.4.10 Cupboard must comply with sabs 1528-3:1992.

5. GENERAL QUALITY AND COMPLIANCE REQUIREMENT

5.1 All furniture must be brand new, unused, free from defects and supplied in good condition.

5.2 The furniture offered must meet or exceed the minimum requirements in this specification. Any proposed alternative must be fully described and supported by product information for assessment.

5.3 Bidders must submit product brochures, catalogues, photographs or technical data sheets showing the actual furniture offered, including dimensions, materials and finishes before any delivery.

5.4 The Department reserves the right to request samples, inspect the proposed products or verify technical compliance before award or delivery.

5.5 Furniture must be fit for purpose, stable, safe, durable and suitable for use by learners and educators in a public secondary school.

5.6 The supplier must not deliver substituted models, sizes, materials or finishes without prior written approval from the Department.

6. WARRANTY AND AFTER SALES SERVICE

6.1 The supplier must provide a written warranty for all furniture supplied and installed. The warranty period of 24 months starting from the date of delivery and acceptance of school furniture.

6.2 The warranty must cover manufacturing defects, defective materials and faulty workmanship under normal school use.

6.3 The supplier must provide contact details and a process for reporting warranty claims.

6.4 Any furniture found to be defective during the warranty period must be repaired or replaced within a reasonable period, at no cost to the Department or the schools, subject to the warranty terms.

7. MANDANTORY REQUIREMENTS

7.1 Interested service providers must submit the following mandatory requirement to be considered for further evaluation on price and specific goal:

- Prospective bidders must bid on all items as per attached pricing schedule.
- A resolution authorizing a particular person to sign the bid documents. In cases of a joint venture, each company/entity must submit a separate resolution authorizing a particular person to sign the bid documents, including a consolidated resolution letter on behalf of the joint venture.

8. FUNCTIONALITY EVALUATION PROCESS

8.1 This bid shall be evaluated in two stages. First stage bids will be evaluated on functionality and second stage in accordance with 80/20 preference points system as stipulated.

8.2 The technical score ill be calculated as follows:

<table>
<tr><th>CRITERIA</th><th>GUIDELINES FOR CRITERIA APPLICATION</th><th>WEIGHTS</th></tr>
<tr><td rowspan="2">1. COMPANY WORK EXPERIENCE IN THE SUPPLY AND DELIVERY OF FURNITURE.</td><td>1.1 Reference letters of the successful completed projects.

The reference letters must be dated, signed indicates the description of service, the value of contract with contactable reference.

<table><tr><td>Very Poor (score 0)</td><td>No reference letters</td></tr><tr><td>Poor (score 1)</td><td>1 to 3 reference letters</td></tr><tr><td>Average (score 2)</td><td>More than 3 reference letters</td></tr><tr><td>Good (score 3)</td><td>More than 4 reference letters</td></tr><tr><td>Very Good (score 4)</td><td>More than 5 reference letters</td></tr><tr><td>Excellent (score 5)</td><td>6 and more reference letters</td></tr></table></td><td>40</td></tr>
<tr><td>1.2 Contract value of the projects on the reference letter. The Value of contract will be combined.

<table><tr><td>Very Poor (score 0)</td><td>No reference letter / reference letter submitted without value</td></tr><tr><td>Poor (score 1)</td><td>Reference letter with contract valued between R500 00 to R999 999</td></tr><tr><td>Average (score 2)</td><td>Reference letter with contract valued between R1 million to R1 999 999</td></tr><tr><td>Good (score 3)</td><td>Reference letter with contract valued between R2 million to R4 999 999</td></tr><tr><td>Very Good (score 4)</td><td>Reference letter with contract valued between R5 million to R9 999 000</td></tr><tr><td>Excellent (score 5)</td><td>Reference letter with contract valued above R10 million</td></tr></table></td><td>30</td></tr>
<tr><td>2. DELIVERY, ASSEMBLY AND INSTALLATION PLAN</td><td>2.1 Bidders must submit a project implementation plan indicating how furniture will be delivered and installed at both schools.

<table><tr><td>Very Poor (score 0)</td><td>No implementation plan submitted</td></tr><tr><td>Average (score 2)</td><td>Inadequate plan</td></tr><tr><td>Good (score 3)</td><td>Basic plan with limited detail</td></tr><tr><td>Very Good (score 4)</td><td>Adequate plan, but some implementation details are missing</td></tr><tr><td>Excellent (score 5)</td><td>Detailed delivery and installation plan covering both schools, timelines, transport, assembly and quality checks</td></tr></table></td><td>15</td></tr>
<tr><td>3. CAPACITY AND RESOURCES</td><td>3.1 Bidders must provide information demonstrating their ability to execute the contract.

<table><tr><td>Very Poor (score 0)</td><td>No sufficient evidence of capacity</td></tr><tr><td>Good (score 3)</td><td>Demonstrated some capacity , but significant information is missing</td></tr><tr><td>Very Good (score 4)</td><td>Demonstrated some capacity with limited supporting documents</td></tr><tr><td>Excellent (score 5)</td><td>Demonstrated adequate personnel, transport, equipment and operational capacity</td></tr></table></td><td>15</td></tr>
</table>

The proposal will be evaluated individually on score sheets, by a representative evaluation panel according to the evaluation criteria indicated above. All service providers who scored less than **60 out of 100 points** for Presentation will not be considered further and considered to be non-responsive. This means that such bids will not be evaluated on the fourth stage (80/20) Preference Point System as prescribed in the Preferential Procurement Regulations 2022).

Second Stage - Evaluation in terms of 80/20 Preference Points System

The 80/20 preference points system as prescribed in the Preferential Procurement Policy Framework Act (PPPFA) will be applied to evaluate this bid, as indicated in the table below (next page). The lowest acceptable bid will score 80 points for price and maximum of 20 points to Specific goals.

	POINTS
PRICE	80
SPECIFIC GOALS	20
Total points for Price and SPECIFIC GOALS	**100**

Bidders who wish to claim points in terms of SDB 6.1 need to provide proof for each point claimed as guided below:

- Who had no franchise in national elections before the 1983 and 1993 Constitution **– attach certified copy of identity document (ID) and company registration document / CSD report to show/ substantiate percentage ownership equity**.
- Who is female- **attach certified copy of identity document (ID) and company registration document / CSD report to show/ substantiate percentage ownership equity**.
- Who has a disability – **attach doctor's letter confirming the disability**
- Who is youth - **attach certified copy of identity document (ID) and company registration document / CSD report to show/ substantiate percentage ownership equity.**
- **Locality**
    - **a valid municipal services account (water, sanitation, rates and electricity) in the name of the bidder/s or active director/s or**
    - **a valid lease agreement from the lessor or**
    - **a letter on the letterhead of the ward councillor/traditional authority/council that must be signed, stamped and dated**

Specific goals for the tender and points claimed are indicated per the table below.

The specific goals allocated points in terms of this tender	Number of points allocated (80/20 system)	Percentage ownership equity (To be completed by the tenderer)	Number of points claimed (80/20 system) (To be completed by the tenderer)
I. Who had no franchise in national elections before the 1983 and 1993 Constitution	8		
II. Who is female	5		
III. Who has a disability	2		
IV. Specific goal: Who is youth	2		
V. Locality	3		

9. GONTRACTUAL ARRANGEMENTS

9.1 The successful supplier will be appointed by DLRRD Limpopo Provincial Shared Services Centre and will be required to enter into agreement for period of 36 months.

10. PUBLICATION

- **E-tender portal**
- **21 days departmental website**

11. CONTACT PERSONS

Query	Name	Contact Details
Technical	Mr LE Baloyi	(015) 495 1073 mashela.mokiti@dlrrd.gov.za
Bid related	Ms D Mongwai	(015) 495 1703 daisy.mongwai@dlrrd.gov.za

Annexure A

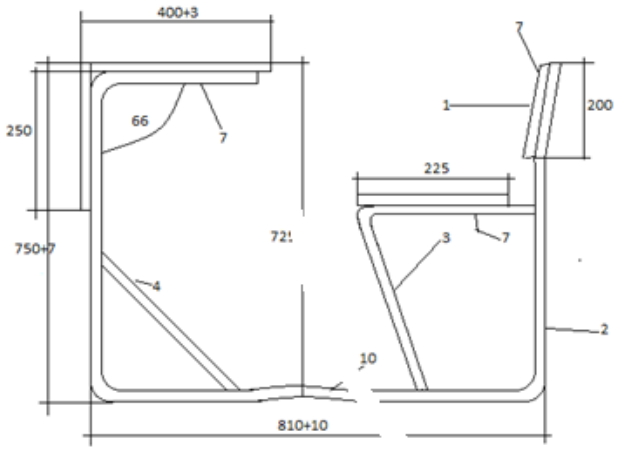
400+3
250
66
7
1
7
200
225
750+7
721
3
7
4
2
10
810+10

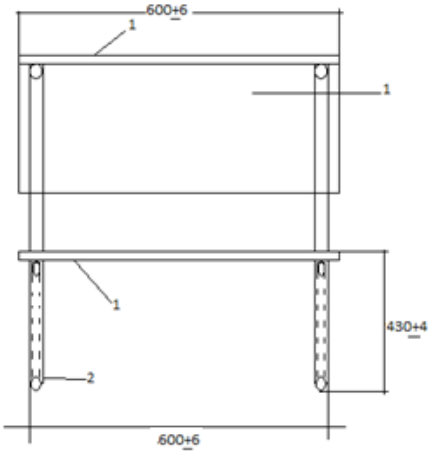
600+6
1
1
1
430+4
2
600+6



Annexure B

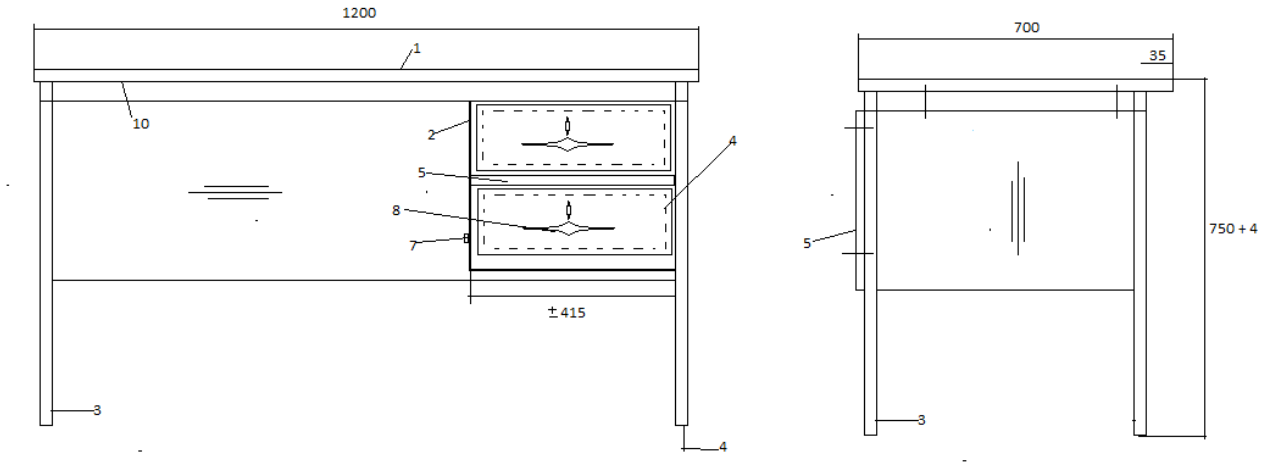



Annexure C

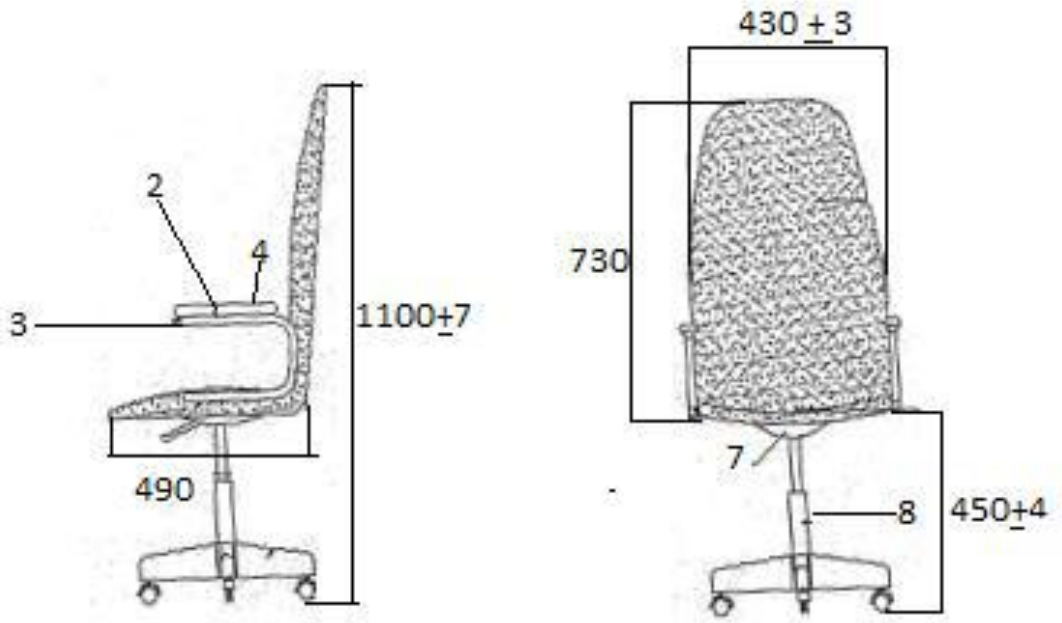



Annexure D

