GAUTENG PROVINCE
PROVINCIAL TREASURY
REPUBLIC OF SOUTH AFRICA

Provincial Supply Chain Management

INVITATION TO BID

BID NUMBER	GT/GDH/050/2026
BID DESCRIPTION	APPOINTMENT OF SERVICE PROVIDERS TO RENDER COMPREHENSIVE HEALTH CARE RISK WASTE MANAGEMENT SERVICES FOR THE GAUTENG DEPARTMENT OF HEALTH INSTITUTIONS FOR A PERIOD OF 36 MONTHS

CUSTOMER DEPARTMENT	GAUTENG DEPARTMENT OF HEALTH
CUSTOMER INSTITUTION	GAUTENG DEPARTMENT OF HEALTH

BRIEFING SESSION	**Y**	✔	**N**		**SESSION COMPULSORY**	**Y**		**N**	✔
					SESSION HIGHLY RECOMMENDED	**Y**	✔	**N**	
BRIEFING VENUE	AUDITORIM , 45 COMMISSIONER STREET , MARSHALL TOWN, JOHANNESBURG				**DATE**	04 DECEMBER 2026	**TIME**	12H30-13H30	
COMPULSORY SITE INSPECTION	**Y**		**N**	✔	**DATE**	N/A	**TIME**	N/A	
SITE INSPECTION ADDRESS	N/A								

TERM AGREEMENT CALLED FOR?	**Y**	✔	**N**		**TERM DURATION**	THREE YEARS

CLOSING DATE	22 JANUARY 2027	**CLOSING TIME**	11H00

TENDER BOX LOCATION
GAUTENG DEPARTMENT OF HEALTH,45 COMMISSIONER STREET,GROUND FLOOR

NOTES

THE TENDER BOX IS OPEN 24 HOURS

- Bids / tenders must be deposited in the Tender Box on or before the closing date and time.
- Bids / tenders submitted by fax will not be accepted.
- This bid is subject to the preferential procurement policy framework act, 2000 and the preferential procurement regulations, 2022, the general conditions of contract (gcc) 2010 and, if applicable, any other special conditions of contract.

ALL BIDS MUST BE SUBMITTED ON THE OFFICIAL GPG BID FORMS – (NOT TO BE RE-TYPED) - ALL REQUIRED INFORMATION MUST BE COMPLETED (FAILURE TO DO SO MAY RESULT IN YOUR BID BEING DISQUALIFIED)

THE TENDERING SYSTEM

The Invitation to Bid Pack consists of two Sections (Section 1 and Section 2). These two sections must be submitted separately, clearly marked with the Tender Number and the Section Number.

TRAINING SESSIONS

Non-compulsory **"How to tender"** workshops are held every Wednesday from 10:00 to 13:00. Kindly follow our social media platforms / etenders@gauteng.gov.za (Publications) for the venue of the training.

GAUTENG PROVINCE
PROVINCIAL TREASURY
REPUBLIC OF SOUTH AFRICA

Provincial Supply Chain Management

INVITATION TO BID

PART A
INVITATION TO BID

SUPPLIER INFORMATION					
NAME OF BIDDER					
POSTAL ADDRESS					
STREET ADDRESS					
TELEPHONE NUMBER	CODE		NUMBER		
CELLPHONE NUMBER					
FACSIMILE NUMBER	CODE		NUMBER		
E-MAIL ADDRESS					
VAT REGISTRATION NUMBER					
SUPPLIER COMPLIANCE STATUS	TAX COMPLIANCE SYSTEM PIN:		OR	CENTRAL SUPPLIER DATABASE No:	MAAA
ARE YOU THE ACCREDITED REPRESENTATIVE IN SOUTH AFRICA FOR THE GOODS /SERVICES OFFERED?	☐ Yes ☐ No [IF YES ENCLOSE PROOF]		ARE YOU A FOREIGN BASED SUPPLIER FOR THE GOODS /SERVICES OFFERED?	☐ Yes ☐ No [IF YES, ANSWER THE QUESTIONNAIRE BELOW]	

QUESTIONNAIRE TO BIDDING FOREIGN SUPPLIERS		
IS THE ENTITY A RESIDENT OF THE REPUBLIC OF SOUTH AFRICA (RSA)?	☐ YES	☐ NO
DOES THE ENTITY HAVE A BRANCH IN THE RSA?	☐ YES	☐ NO
DOES THE ENTITY HAVE A PERMANENT ESTABLISHMENT IN THE RSA?	☐ YES	☐ NO
DOES THE ENTITY HAVE ANY SOURCE OF INCOME IN THE RSA?	☐ YES	☐ NO
IS THE ENTITY LIABLE IN THE RSA FOR ANY FORM OF TAXATION?	☐ YES	☐ NO

IF THE ANSWER IS "NO" TO ALL OF THE ABOVE, THEN IT IS NOT A REQUIREMENT TO REGISTER FOR A TAX COMPLIANCE STATUS SYSTEM PIN CODE FROM THE SOUTH AFRICAN REVENUE SERVICE (SARS) AND IF NOT REGISTER AS PER 2.3 BELOW.

GAUTENG PROVINCE
PROVINCIAL TREASURY
REPUBLIC OF SOUTH AFRICA

Provincial Supply Chain Management

INVITATION TO BID

TENDER DOCUMETS CAN BE OBTAINED FROM: https://e-tenders.gauteng.gov.za/Pages/Advertised-Open-Tenders.aspx
OR
ALTERNATIVELY SEND AN E-MAIL TO: Tender.admin@gauteng.gov.za

ANY ENQUIRIES REGARDING BIDDING PROCEDURE MAY BE DIRECTED TO:	
DEPARTMENT	GAUTENG DEPARTMENT OF HEALTH
CONTACT PERSON	Masoto Malele/ Jeffrey Mafumo
TELEPHONE NUMBER	N/A
FACSIMILE	N/A
E-MAIL ADDRESS	Masoto.Malele@gauteng.gov.za/ Jefrrey.Mafumo@gauteng.gov.za

ANY ENQUIRIES REGARDING TECHNICAL INFORMATION MAY BE DIRECTED TO:	
DEPARTMENT	GAUTENG DEPARTMENT OF HEALTH
CONTACT PERSON	Mr. Edgar Motha /Ms Rudo Samudzi
TELEPHONE NUMBER	N/A
FACSIMILE	N/A
E-MAIL ADDRESS	Edgar.Motha@gauteng.gov.za/ Rudo.Samudzi@gauteng.gov.za

GAUTENG PROVINCE
PROVINCIAL TREASURY
REPUBLIC OF SOUTH AFRICA

Provincial Supply Chain Management

INVITATION TO BID

PART B
TERMS AND CONDITIONS FOR BIDDING

1. BID SUBMISSION:

1.1. BIDS MUST BE DELIVERED BY THE STIPULATED TIME TO THE CORRECT ADDRESS. LATE BIDS WILL NOT BE ACCEPTED FOR CONSIDERATION.

1.2. **ALL BIDS MUST BE SUBMITTED ON THE OFFICIAL FORMS PROVIDED (NOT TO BE RE-TYPED) OR IN THE MANNER PRESCRIBED IN THE BID DOCUMENT.**

1.3. THIS BID IS SUBJECT TO THE PREFERENTIAL PROCUREMENT POLICY FRAMEWORK ACT, 2000 AND THE PREFERENTIAL PROCUREMENT REGULATIONS, THE GENERAL CONDITIONS OF CONTRACT (GCC) AND, IF APPLICABLE, ANY OTHER SPECIAL CONDITIONS OF CONTRACT.

1.4. **THE SUCCESSFUL BIDDER WILL BE REQUIRED TO FILL IN AND SIGN A WRITTEN CONTRACT FORM (SBD7).**

2. TAX COMPLIANCE REQUIREMENTS

2.1 BIDDERS MUST ENSURE COMPLIANCE WITH THEIR TAX OBLIGATIONS.

2.2 BIDDERS ARE REQUIRED TO SUBMIT THEIR UNIQUE PERSONAL IDENTIFICATION NUMBER (PIN) ISSUED BY SARS TO ENABLE THE ORGAN OF STATE TO VERIFY THE TAXPAYER'S PROFILE AND TAX STATUS.

2.3 APPLICATION FOR TAX COMPLIANCE STATUS (TCS) PIN MAY BE MADE VIA E-FILING THROUGH THE SARS WEBSITE WWW.SARS.GOV.ZA.

2.4 BIDDERS MAY ALSO SUBMIT A PRINTED TCS CERTIFICATE TOGETHER WITH THE BID.

2.5 IN BIDS WHERE CONSORTIA / JOINT VENTURES / SUB-CONTRACTORS ARE INVOLVED; EACH PARTY MUST SUBMIT A SEPARATE TCS CERTIFICATE / PIN / CSD NUMBER.

2.6 WHERE NO TCS PIN IS AVAILABLE BUT THE BIDDER IS REGISTERED ON THE CENTRAL SUPPLIER DATABASE (CSD), A CSD NUMBER MUST BE PROVIDED.

2.7 NO BIDS WILL BE CONSIDERED FROM PERSONS IN THE SERVICE OF THE STATE, COMPANIES WITH DIRECTORS WHO ARE PERSONS IN THE SERVICE OF THE STATE, OR CLOSE CORPORATIONS WITH MEMBERS PERSONS IN THE SERVICE OF THE STATE."

NB: FAILURE TO PROVIDE / OR COMPLY WITH ANY OF THE ABOVE PARTICULARS MAY RENDER THE BID INVALID.

SIGNATURE OF BIDDER		**DATE**	
CAPACITY UNDER WHICH THIS BID IS SIGNED (Proof of authority must be submitted e.g. company resolution)			

GAUTENG PROVINCE
HEALTH
REPUBLIC OF SOUTH AFRICA

CONSENT FORM TO PROCESS PERSONAL INFORMATION IN TERMS OF THE PROTECTION OF PERSONAL INFORMATION ACT, NO. 4 OF 2013 (POPIA).

The purpose of the POPIA is to protect personal information of individuals and businesses and to give effect to their right of privacy as provided for in the Constitution.
By signing this form, you consent to your personal information to be processed by the Gauteng Department of Health and consent is effective immediately and will remain effective until such consent is withdrawn.

APPLICATION FOR THE CONSENT OF A DATA SUBJECT FOR THE PROCESSING OF PERSONAL INFORMATION FOR THE PURPOSE OF BIDS

Name & Surname/Company: _____

Residential/Postal or Business Address: _____

_____

Contact number (s): _____

Email address: _____

1. In the furtherance of the Gauteng Department of Health's (**The Department**) operational requirements and for purposes of complying with its policies, procedures and privacy laws, we may be required to disclose, process and/or further process your personal information provided to us and/or made available by virtue of submission of this bid.

2. For purposes contemplated in paragraph 1, the Department, hereby requests your consent and/or authorisation for the disclosure, processing and/or further processing of any and/or all your personal information as may be necessary for reasons provided in paragraph 1.

3. By signing this Personal Information Processing Consent Form, you hereby grant the Department permission, consent and/or authorisation to disclose, process and further process your personal information within our records, as may be required and/or necessary from time to time.

I, the undersigned, _____ (*INSERT FULL NAME AND SURNAME*) with Identity Number_____, in my personal capacity or acting on behalf of _____ _____ (Name of **Company**), confirm that:

4. I have read and understood the contents of this Personal Information Processing Consent form, the details of which have been explained to me and furthermore I understand my right to privacy and the right to have my personal information processed in accordance with the conditions for the lawful processing of personal information.

5. I declare that all my personal information supplied to the Department is accurate, up to date, not misleading and that it is complete in all respects and will be held and/ or stored securely for the purpose for which it was collected and that I will immediately advise the Department of any changes to my Personal Information should any of these details change.

6. I also understand that I have the right to request that my personal information be corrected or deleted, if it is inaccurate, irrelevant, excessive, out of date, incomplete, misleading, or obtained unlawfully or that the personal information or record be destroyed or deleted if the Department is no longer authorised to retain it.

7. I declare that my personal/the Company's information and/or data may be disclosed, processed and/or further processed by the Department (including its employees, agents, contractors and representatives) and such other third parties contracted with the Department involved in the processing, verification and management of my and/or Company's Personal Information in accordance with the requirements set out in paragraph 1;

8. I accept the data security and protection measures adopted and/or applied by the Department in their retention, disclosure, processing, and further processing of my and/or Company's personal information/data.

9. I accept that the Department may retain any of my personal/the Company information/data as may be required for purposes contemplated in paragraph 1.

10. With my signature below, do hereby give my or the Company's irrevocable consent, and/or authorisation for purposes required and/or detailed in this *Personal Information Processing Consent* form.

Signed at ..... this ..... day of .....20……

…..... ……

Name of data subject/ designated person Signature

…… ……..

Name/Surname/Dept of Responsible Party Signature

Date:

GAUTENG PROVINCE TREASURY REPUBLIC OF SOUTH AFRICA	PROVINCIAL SUPPLY CHAIN MANAGEMENT	
	INSTRUCTION TO BIDDERS	**Page: 1 of 4**

1.	The INVITATION TO BID Pack is drawn up so that certain essential information should be furnished in a specific manner. Any additional particulars shall be furnished in a separate annexure.
2.	The INVITATION TO BID forms should not be retyped or redrafted, but photocopies may be prepared and used. Additional offers may be made for any item, but only on a photocopy of the page in question or on other forms obtainable from the relevant Department or Institution advertising this BID. Additional offers made in any other manner may be disregarded.
3.	Should the INVITATION TO BID forms not be filled in by means of electronic devices, bidders are encouraged to complete forms in a black ink.
4	Bidders shall check the numbers of the pages and satisfy themselves that none are missing or duplicated. No liability shall be accepted with regards to claims arising from the fact that pages are missing or duplicated.
5	The INVITATION TO BID forms shall be completed, signed and submitted with the bid. SBD 5 (National Industrial Participation Programme Form) will only be added to the INVITATION TO BID pack when an imported component in excess of US $ 10 million is expected.
6	A separate SBD 3.1, SBD 3.2 or SBD 3.3 form (PRICING SCHEDULE per item) shall be completed in respect of each item. Photocopies of this form may be prepared and used or additional copies, (if required) are obtainable from the relevant Department or Institution advertising this BID (not applicable for PANEL of BIDDERS).
7	Firm delivery periods and prices are preferred. Consequently, bidders shall clearly state whether delivery periods and prices will remain firm for the duration of any contract, which may result from this BID, by completing SBD 3.1 (PRICING SCHEDULE per item) (not applicable for PANEL of BIDDERS).
8	If non-firm prices are offered bidders must ensure that a separate SBD 3.2 (Non-Firm Prices per item) is completed in respect of each item for which a non-firm price is offered. Photocopies of this form may be prepared and used or additional copies, (if required) are obtainable from the relevant Department or Institution advertising this BID (not applicable for PANEL of BIDDERS).

9	Where items are specified in detail, the specifications form an integral part of the BID document (see the attached specification) and bidders shall indicate in the space provided whether the items offered are to specification or not (not applicable for PANEL of BIDDERS).
10	In respect of the paragraphs where the items offered are strictly to specification, bidders shall insert the words **"as specified"** (see the attached specification) (not applicable for PANEL of BIDDERS).
11	In cases where the items are not to specification, the deviations from the specifications shall be indicated (see the attached specification).
12	In instances where the bidder is not the manufacturer of the items offered, the bidder must as per SBD 3.1 or SBD 3.2 (PRICING SCHEDULE per item) submit a Letter of Supply from the relevant manufacturer or his supplier (not applicable for PANEL of BIDDERS).
13	The offered prices shall be given in the units shown in the attached specification, as well as in SBD 3.1 or SBD 3.2 (PRICING SCHEDULE per item) (not applicable for PANEL of BIDDERS).
14	With the exception of imported goods, where required, all prices shall be quoted in South African currency. Where bids are submitted for imported goods, foreign currency information must be supplied by completing the relevant portions of SBD 3.1 (PRICING SCHEDULE per item) and SBD 3.2 (PRICING SCHEDULE per item) (not applicable for PANEL of BIDDERS).
15	Unless otherwise indicated, the costs of packaging materials (if applicable) are for the account of the bidder and must be included in the bid price on the (PRICING SCHEDULE per item) (not applicable for PANEL of BIDDERS).
16	Delivery basis (not applicable for PANEL of BIDDERS): a) Supplies which are held in stock or are in transit or on order from South African manufacturers at the date of offer shall be offered on a basis of delivery into consignee's store or on his site within the free delivery area of the bidder's centre, or carriage paid consignee's station, if the goods are required elsewhere. b) Notwithstanding the provisions of paragraph 16(a), offered prices for supplies in respect of which installation / erection / assembly is a requirement, shall include ALL costs on a “delivered on site” basis, as specified on the (PRICING SCHEDULE per item).

17	Unless specifically provided for in the BID document, no bids transmitted by facsimile or email shall be considered.
18	Failure on the part of the bidder to sign any of the INVITATION TO BID forms and thus to acknowledge and accept the conditions in writing or to complete the attached INVITATION TO BID forms, Preference documents, questionnaires and specifications in all respects, may invalidate the bid.
19	Bids should preferably not be qualified by the bidder's own conditions of bid. Failure to comply with these requirements (i.e. full acceptance of the General Conditions of Contract or to renounce specifically the bidder's own conditions of bid, when called upon to do so, may invalidate the bid.
20	In case of samples being called for together with the bid, the successful bidder may be required to submit pre-production samples to the South African Bureau of Standards (SABS) or such testing authority as designated at the request of the relevant Department concerned. Unless the relevant Department decides otherwise, pre-production samples must be submitted within thirty (30) days of the date on which the successful bidder was requested to do so. Mass production may commence only after both the relevant Department and the successful bidder have been advised by the SABS that the pre-production samples have been approved.
21	Should the pre-production samples pass the inspections / tests at the first attempt, the costs associated with the inspections / tests will be for the account of the relevant Department. If the SABS or such testing authority as designated do not approve the pre-production samples, but requires corrections / improvements, the costs of the inspections / tests must be paid by the successful bidder and samples which are acceptable in all respects must then reach the SABS or such testing authority as designated within twenty-one (21) days of the date on which the findings of the SABS or such testing authority as designated were received by the successful bidder. Failure to deliver samples within the specified time and to the required standards may lead to the cancellation of the intended contract.
22	In case of samples being called for together with the bid, the samples must be submitted together with the bid before the closing time and date of the BID, unless specifically indicated otherwise. Failure to submit the requested sample(s)before the closing time and date of the BID may invalidate the bid.
23	In cases where large quantities of a product are called for, it may be necessary for the relevant item to be shared among two (2) or more suppliers.

24	In cases where the relevant Department or Institution advertising this BID may deem it necessary, a formal contract may be entered into with the successful bidder, in addition to a Letter of Acceptance and / or purchase order being issued.
25	If any of the conditions on the BID forms are in conflict with any special conditions, stipulations or provisions incorporated in the bid invitation, such special conditions, stipulations or provisions shall apply.
26	This BID is subject to the General Conditions of Contract and re-issues thereof. Copies of these conditions are obtainable from any office of the Gauteng Provincial Government (GPG).
27	Each bid must be submitted in a separate, sealed envelope on which the following must be clearly indicated: • NAME AND ADDRESS OF THE BIDDER; • THE BID (GT) NUMBER; AND • THE CLOSING DATE. The bid must be deposited or posted; • To the address as indicated on SBD1 and to reach the destination not later than the closing time and date; **OR** • deposited in the tender box as indicated on SBD1 before the closing time and date.
28	The Gauteng Provincial Government has become a member and as such a key sponsor of the Proudly South African Campaign. GPG therefore would like to procure local products of a high quality, produced through the practise of sound labour relations and in an environment where high environmental standards are maintained. In terms of the Proudly South African Campaign South African companies are encouraged to submit interesting and innovative achievements in the manufacturing field (if relevant to this BID) – including information on new products, export achievements, new partnerships and successes and milestones.
29	Compulsory GPG Contract: It is a mandatory requirement that successful bidder/s (to whom a tender is awarded) sign a GPG Contract upon award of any given contract.

GAUTENG PROVINCE
PROVINCIAL TREASURY
REPUBLIC OF SOUTH AFRICA

PROVINCIAL SUPPLY CHAIN MANAGEMENT

POINT SYSTEM

BID NUMBER	GT/GDH/050/2026	**CLOSING DATE**	22 JANUARY 2027
VALIDITY OF BID	120 DAYS	**CLOSING TIME**	11H00

The goods / services are required by the Customer Department / Institution, as indicated on SBD 01.

This BID will be evaluated on the basis of the under noted point system, as stipulated in the Preferential Procurement Policy Framework Act (Act number 5 of 2000).

POINT SYSTEM

The applicable preference point system for this tender is the 90/10 preference point system.	✔
The applicable preference point system for this tender is the 80/20 preference point system.	
Either the 90/10 or 80/20 preference point system will be applicable in this tender	

TYPE OF CONTRACT (COMPLETED BY PROJECT MANAGER)

SERVICE BASED	**Y**	✔	**N**		**SERVICE BASED**	**Y**	✔	**N**		**VALUE BASED**	**Y**		**N**	✔
VALUE BASED	**Y**		**N**	✔										
QUANTITY BASED	**Y**		**N**	✔										
TERM BASED	**Y**	✔	**N**											

GAUTENG PROVINCE PROVINCIAL TREASURY REPUBLIC OF SOUTH AFRICA	PROVINCIAL SUPPLY CHAIN MANAGEMENT	
	BIDDER'S DISCLOSURE	Page: 1 of 3

BIDDER'S DISCLOSURE

1. PURPOSE OF THE FORM

Any person (natural or juristic) may make an offer or offers in terms of this invitation to bid. In line with the principles of transparency, accountability, impartiality, and ethics as enshrined in the Constitution of the Republic of South Africa and further expressed in various pieces of legislation, it is required for the bidder to make this declaration in respect of the details required hereunder.

Where a person/s are listed in the Register for Tender Defaulters and / or the List of Restricted Suppliers, that person will automatically be disqualified from the bid process.

2. Bidder's declaration

2.1 Is the bidder, or any of its directors / trustees / shareholders / members / partners or any person having a controlling interest 1 in the enterprise, employed by the state?

YES		NO	

2.1.1 If so, furnish particulars of the names, individual identity numbers, and, if applicable, state employee numbers of sole proprietor/ directors / trustees / shareholders / members/ partners or any person having a controlling interest in the enterprise, in table below.

Full Name	Identity Number	Name of State Institution

1 the power, by one person or a group of persons holding the majority of the equity of an enterprise, alternatively, the person/s having the deciding vote or power to influence or to direct the course and decisions of the enterprise.

GAUTENG PROVINCE PROVINCIAL TREASURY REPUBLIC OF SOUTH AFRICA	PROVINCIAL SUPPLY CHAIN MANAGEMENT	
	BIDDER'S DISCLOSURE	Page: 2 of 3

2.2 Do you, or any person connected with the bidder, have a relationship with any person who is employed by the procuring institution?

YES		NO	

2.2.1 If so, furnish particulars:

2.3 Does the bidder or any of its directors / trustees / shareholders / members / partners or any person having a controlling interest in the enterprise have any interest in any other related enterprise whether or not they are bidding for this contract?

YES		NO	

2.3.1 If so, furnish particulars:

3 DECLARATION

I, the undersigned (name) _____ in submitting the accompanying bid, do hereby make the following statements that I certify to be true and complete in every respect:

3.1 I have read and I understand the contents of this disclosure;

3.2 I understand that the accompanying bid will be disqualified if this disclosure is found not to be true and complete in every respect;

3.3 The bidder has arrived at the accompanying bid independently from, and without consultation, communication, agreement or arrangement with any competitor. However, communication between partners in a joint venture or consortium 2 will not be construed as collusive bidding.

3.4 In addition, there have been no consultations, communications, agreements or arrangements with any competitor regarding the quality, quantity, specifications, prices, including methods, factors or formulas used to calculate prices, market allocation, the intention or decision to submit or not to submit the bid, bidding with the intention not to win the bid and conditions or delivery particulars of the products or services to which this bid invitation relates.

2 Joint venture or Consortium means an association of persons for the purpose of combining their expertise, property, capital, efforts, skill and knowledge in an activity for the execution of a contract.

GAUTENG PROVINCE PROVINCIAL TREASURY REPUBLIC OF SOUTH AFRICA	PROVINCIAL SUPPLY CHAIN MANAGEMENT	
	BIDDER'S DISCLOSURE	**Page: 3 of 3**

3.5 The terms of the accompanying bid have not been, and will not be, disclosed by the bidder, directly or indirectly, to any competitor, prior to the date and time of the official bid opening or of the awarding of the contract.

3.6 There have been no consultations, communications, agreements or arrangements made by the bidder with any official of the procuring institution in relation to this procurement process prior to and during the bidding process except to provide clarification on the bid submitted where so required by the institution; and the bidder was not involved in the drafting of the specifications or terms of reference for this bid.

3.7 I am aware that, in addition and without prejudice to any other remedy provided to combat any restrictive practices related to bids and contracts, bids that are suspicious will be reported to the Competition Commission for investigation and possible imposition of administrative penalties in terms of section 59 of the Competition Act No 89 of 1998 and or may be reported to the National Prosecuting Authority (NPA) for criminal investigation and or may be restricted from conducting business with the public sector for a period not exceeding ten (10) years in terms of the Prevention and Combating of Corrupt Activities Act No 12 of 2004 or any other applicable legislation.

I CERTIFY THAT THE INFORMATION FURNISHED IN PARAGRAPHS 1, 2 and 3 ABOVE IS CORRECT.

I ACCEPT THAT THE STATE MAY REJECT THE BID OR ACT AGAINST ME IN TERMS OF PARAGRAPH 6 OF PFMA SCM INSTRUCTION 03 OF 2021/22 ON PREVENTING AND COMBATING ABUSE IN THE SUPPLY CHAIN MANAGEMENT SYSTEM SHOULD THIS DECLARATION PROVE TO BE FALSE.

Signature		**Date**	
Position		**Name of the Bidder**	

GAUTENG PROVINCE
PROVINCIAL TREASURY
REPUBLIC OF SOUTH AFRICA

PROVINCIAL SUPPLY CHAIN MANAGEMENT

EVALUATION METHODOLOGY PROCESS

EVALUATION METHODOLOGY

- Bidders must complete Compulsory Documents and attach it to their Bid Document failing which the tender shall not be considered for further evaluation.
- Points will be awarded in accordance with the Preferential Procurement Policy Framework Act (PPPFA)

STAGE 1

CRITERIA FOR FUNCTIONALITY	
STAGE 1A: MANDATORY ADMINISTRATIVE COMPLIANCE	
STAGE 1B: DESKTOP EVALUATION - FUNCTIONALITY	
STAGE 1C: SITE VISIT EVALUATION	

NOTE: Bidders who fail to meet the above minimum requirements (Stage 1) shall be automatically eliminated and will not be considered for further evaluation.

GAUTENG PROVINCE
PROVINCIAL TREASURY
REPUBLIC OF SOUTH AFRICA

PROVINCIAL SUPPLY CHAIN MANAGEMENT

EVALUATION METHODOLOGY PROCESS

STAGE 2

CRITERIA FOR PRICE AND PREFERENCE POINTS (SPECIFIC GOALS)	POINTS
Bid Price	90
Preference Points (Specific Goals)	10
TOTAL	100

SPECIFIC GOALS SHALL BE ALLOCATED AS FOLLOWS:

	POINTS ALLOCATED
SPECIFIC GOALS	10
1.The promotion of South African owned enterprises	5
2.Enterprise which is at least 51% owned by HDIs	5
3.	
4.	
5.	
6.	
7.	
8.	
9.	
10.	

***It is the responsibility of the bidder to complete the relevant form (SBD 6.1) and submit it with this BID to the relevant office to qualify for the preference points.**

GAUTENG PROVINCE
PROVINCIAL TREASURY
REPUBLIC OF SOUTH AFRICA

PROVINCIAL SUPPLY CHAIN MANAGEMENT

EVALUATION METHODOLOGY PROCESS

BIDDERS JOB CREATION ANALYSIS

Company Name		**Date Established**	

	Permanent	**Temp**	**SA Citizens**	**Other**	**Comments**
Staff compliment at Establishment of Enterprise					
Current staff compliment					
Number of jobs to be created if Bid is successful					

The successful bidder may be audited during the course of the contract to verify the above information.

Comments to include:

- If Job Creation is direct (by your own company) or indirect (by your source of supply)
- Where the jobs created for employees that were in existing positions or unemployed? (Net Job Creation)

NOTE: Job Creation should adhere to all applicable RSA Legislation and Regulations.

THIS SECTION IS FOR OFFICE USE ONLY						
Observations	**Initial Job Count**	**Job Creation Potential**	**1st Quarter**	**2nd Quarter**	**3rd Quarter**	**4th Quarter**
Year 1						
Year 2						
Year 3						
Year 4						
Year 5						

GAUTENG PROVINCE
HEALTH
REPUBLIC OF SOUTH AFRICA

GT/GDH/050/2026 APPOINTMENT OF SERVICE PROVIDERS TO RENDER COMPREHENSIVE HEALTH CARE RISK WASTE MANAGEMENT SERVICES FOR THE GAUTENG DEPARTMENT OF HEALTH INSTITUTIONS FOR A PERIOD OF 36 MONTHS

GT/GDH/050/2026

TERMS OF REFERENCE FOR THE APPOINTMENT OF SERVICE PROVIDERS TO RENDER COMPREHENSIVE HEALTH CARE RISK WASTE MANAGEMENT SERVICES FOR THE GAUTENG DEPARTMENT OF HEALTH INSTITUTIONS FOR A PERIOD OF 36 MONTHS

GAUTENG PROVINCE
HEALTH
REPUBLIC OF SOUTH AFRICA

GT/GDH/050/2026 APPOINTMENT OF SERVICE PROVIDERS TO RENDER CCOMPREHENSIVE HEALTHCARE RISK WASTE MANAGEMENT SERVICES FOR THE GAUTENG DEPARTMENT OF HEALTH INSTITUTIONS FOR A PERIOD OF 36 MONTHS

TABLE OF CONTENTS

LIST OF ACRONYMS vi

DEFINITIONS vii

1. LEGISLATIVE AND REGULATORY FRAMEWORK 13
   1.1. The General Conditions of Contract (GCC): 13
   1.2. The Special Conditions of Contract (SCC): 13
   1.3. Applicable legal Frameworks, Acts & Regulations: 13
2. THE FORMAT OF THE BID DOCUMENT 14
3. PURPOSE 17
4. SCOPE OF WORK 17
   4.1. The Health Care Facilities (HCFs) 18
   4.2. Segregation and Containerization of HCRW 18
      4.2.1. Infectious HCRW 18
      4.2.2. Sharps HCRW 19
      4.2.3. Pathological HCRW 19
      4.2.4. Pharmaceutical HCRW 19
      4.2.5. Isolation HCRW 19
      4.2.6. Chemical Waste 20
   4.3. Type and Supply of Durable Items 20
      4.3.1. General Requirements for Durable Items 21
      4.3.2. General installation and Manufacturing Requirements for Durable Items 37
      4.3.3. Testing Requirements for the Plastic Brackets 37
   4.4. Signage at Central Storage Area 38
      4.4.1. Class 38
   4.5. FREEZERS 39
   4.6. Type and Supply of Disposable Containers 40
      4.6.1. Distribution and Transport of Disposable Containers 40
      4.6.2. Disposable Container Delivery Point 41
      4.6.3. General Requirements for Disposable Containers 41
      4.6.4. Sharps Containers 42

4.6.5. Specican Containers 43
4.6.6. Pharmaceutical and Chemical Containers 43
4.6.7. Liners 44
4.6.8. Bio-Hazard Cardboard Box 45
4.6.9. Bio-hazard Tape Specification 45
4.6.10. Spill Kit Content 45
4.7. Type and Supply of Reusable Containers 46
4.7.1. Managing supply of Reusable Containers 47
4.7.2. Maintenance of Reusable Containers 47
4.7.3. Specifications for Reusable Containers 47
4.7.4. Categories and ranges of reusable containers 49
4.7.5. Manufacturing of Reusable Containers 49
4.7.6. Reusable Container Markings 50
4.7.7. Reusable containers pictures 51
4.7.8. Stickers 52
4.7.9. Decontamination of Reusable Containers 52
4.8. Tracking System for Containers 54
4.9. Collection, Storage and Weighing of Generated HCRW 54
4.9.1. Collections 54
4.9.2. Collection arrangements 55
4.9.3. Weighing and Scale Requirements 56
4.10. Transportation 58
4.10.1. Requirements for transportation 58
4.11. Treatment of the HCRW 59
4.12. Disposal of Residues 59
4.13. Specifications For Consultancy Support And On-Site Training 59
4.13.1. Consultancy Support 60
4.13.2. The consultancy services shall include but are not limited to: 60
4.13.3. On-Site Training 60
4.13.4. Scope of the training programme 61
4.13.5. Training Sessions Required (*refer to annexure A price schedule*) 61



GAUTENG PROVINCE
HEALTH
REPUBLIC OF SOUTH AFRICA

4.13.6. Background of Trainer 61
4.13.7. Qualifications for Trainers 62
4.13.8. Experience in the design of training programmes; 62
4.13.9. Target groups for training 62
4.14. Training Content 62
4.14.1. Skills teaching 63
4.14.2. Training materials 63
4.14.3. Awareness activities and other support materials 63
4.15. Training Evaluation 64
4.16. Commencement Of New Service Provider And Mobilisation 64
4.17. Rollout 65
4.18. Communications 65
4.18.1. Meetings 65
4.18.2. Reports 65
4.18.3. Monthly Progress Report 66
4.18.4. Monthly progress reports shall inter alia include 66
4.18.5. Incident / Accident Reports 67
4.19. Contingency Plan 67
4.20. Health And Safety 69
4.21. Structure Of The Contract 70
4.22. Payment For Services And Supplies 70
4.23. Collection Done In Reusable Containers 71
4.24. Penalties 72
4.25. Specification For Provision Of A Reusable System For All HCFs 73
4.25.1. Rollout at all HCFs 73
4.25.2. Rollout Period 73
4.25.3. Dual system operation during the Rollout Period 73
4.25.4. Reporting during the rollout 74
5. ANNEXURE 1: MAIN LIST OF HEALTH CARE FACILITIES 74
6. ANNEXURE 2: THE EVALUATION METHODOLOGY AND SPECIAL CONDITIONS 74

LIST OF FIGURES PAGE

Figure 1 (A): Wall sharps container bracket 12

Figure 2: Nursing-trolley sharps bracket for rectangular shape sharps 12

Figure 3: Wall mounted basket 14

Figure 4: Nursing trolley basket 15

Figure 5: Free standing rack for HCRW liner– 85 litres 16

Figure 6: Lids for wall mounted basket 17

Figure 7: Lids for free standing rack 18

Figure 8: Plastic brackets 19

Figure 9: Kick-a-bout (10 and 20 litre) 20

Figure 10: Internal HCRW transport trolleys, (A-C) 20

Figure 11: Central storage area signage 23

Figure 12: Chest Freezer examplar 24

Figure 13: Stainless steel pedal bin 34

Figure 14: Plastic pedal bin 34

Figure 15: Wheelie bins 35

Figure 16: Stackable container 35

Figure 17: Reusable tall slim sharps container 35



GAUTENG PROVINCE
HEALTH
REPUBLIC OF SOUTH AFRICA

LIST OF TABLES

Table 1: The bid format 2

Table 2: Summary of durable items 9

Table 3: Sharps container specifications 26

Table 4: Summary of specican container specifications 27

Table 5: Pharmaceutical and chemical container specifications 27

Table 6: Red liner specifications and applications 28

Table 7: Summary of biohazard cardboard box specifications 29

Table 8: Items of spill kit 29

Table 9: Reusable container sizes 33

Table 10: Manufacturing requirements and material to be used in resusable containers 33

Table 11: Collection frequencies 39

Table 12: Reporting and meetings 47

Table 13: Reports and responsibilties of service providers 48

Table 14: Penalties 54



GAUTENG PROVINCE
HEALTH
REPUBLIC OF SOUTH AFRICA

LIST OF ACRONYMS

µm	Microns
AD	Assistant Director
CEO	Chief Executive Officer
CHC	Community Health Centre
Cr6+	Chromium 6
CSD	Central Supplier Database
DBAC	Departmental Bid Adjudication Committee
DEFF	Department of Environment Forestry and Fisheries
DR	Departmental Representative
EH	Environmental Health
EHP	Environmental Health Practitioner
EMS	Emergency Medical Services
FPS	Forensic and Pathology Services
GCC	General Conditions of Contract
GDARD	Gauteng Department of Agriculture and Rural Development
GPG	Gauteng Provincial Government
GPT	Gauteng Provincial Treasury
GRV	Goods Received Voucher
HCF	Health Care Facility
GWIS	Gauteng Waste Information System
HCFs	Health Care Facilities
HCRW	Health Care Risk Waste
HCW	Health Care Waste
HCWC	Health Care Waste Coordinator
HCWM	Health Care Waste Management
HCWO	Health Care Waste Officer
Hg	Mercury
Kg	Kilogram
Mm	Millimetre
NEMA	National Environmental Management Act
NGO	Non-Governmental Organisation
OHS	Occupational Health and Safety
Pb	Lead
PFMA	Public Finance Management Act
PO	Purchase order
PPE	Personal Protective Equipment
PPR	Preferential Procurement Regulation, 2017



GAUTENG PROVINCE
HEALTH
REPUBLIC OF SOUTH AFRICA

PVC	Polyvinyl Chloride
SABS	South African Bureau of Standards
SANS	South African National Standards (SANS)
SAHPRA	South African Health Product Regulatory Authority
SARS	South African Revenue Services
SCC	Special Conditions of Contract
SCM	Supply Chain Management
SOP	Standard Operating Procedure
UVGI	Ultraviolet Germicidal Irradiation
VAT	Value-Added Tax

DEFINITIONS

Alternative Treatment Technology	Means other HCRW treatment technologies/methods other than combustion treatment e.g., thermal deactivation/inverting.
Bar code	An electronic device machine readable code in the form of numbers and a pattern of parallel lines.
B-BBEE Controlled	A juristic person, having shareholding or similar members interest, in which black Company participants, enjoy a right to Exercisable Voting Rights that is at least 51% of the total such rights measured using the Flow-Through Principle.
B-BBEE Owned	A juristic person having shareholding or similar members interest, that is BEE Company controlled, in which black participants enjoy a right to Economic interest that is at least 51% of the total such rights measured using the Flow-Through Principle.
Cable ties	Type of fastener used for holding or binding items together.
Clinical Glass	Means any discarded glass bottles or glass vials still containing a hazardous residue.
Cytotoxic Waste	Cytotoxic waste is defined as waste containing substances with genotoxic properties such as cytotoxic drugs used in cancer treatment
Department	Means the Gauteng Department of Health.
Departmental Representative	A person or individual nominated by the department for the purposes of managing this contract. The Department will inform the service provider of this appointment in writing.
Departmental Logo	A logo for Gauteng Department of Health.
Disposable containers / items	Containers / items that are single use specifically designed for the HCW industry and destined to be destroyed by any HCRW treatment process that complies with the legal requirements (specified in paragraph 4.6)



GAUTENG PROVINCE
HEALTH
REPUBLIC OF SOUTH AFRICA

GT/GDH/050/2026 APPOINTMENT OF SERVICE PROVIDERS TO RENDER CCOMPREHENSIVE HEALTHCARE RISK WASTE MANAGEMENT SERVICES FOR THE GAUTENG DEPARTMENT OF HEALTH INSTITUTIONS FOR A PERIOD OF 36 MONTHS

District	Means the Gauteng Department of Health Districts [Johannesburg, West Rand District, Ekurhuleni District, Sedibeng District and Tshwane Health Districts] as specified in these contract specifications.
Rollout Plan	Means a detailed strategy for the systematic implementation of the new HCW management system at new HCFs, new wards or newly provincialized HCFs. The rollout plan shall be developed by the service provider.
Durable Items	Items that are able to exist for a long time without significant deterioration in quality or value. (all items specified in paragraph 4.3)
Environmental Health Practitioner	Means a person registered with the professional body such as the Health Professions Council of South Africa who deals with elements of safety, health and the suitability of various environments.
Expired fixers	Means a solution containing one or more chemical compounds that is used, in fixing, to dissolve unexposed silver halides. It sometimes has an additive to stop the action of developer (Used in radiology sections in HCFs).
HCF Rollout Plan	Means a detailed strategy for the systematic implementation of the new HCRW management system at individual HCFs within a district.
HCRW Management	Means all activities, administrative and operational, associated with the handling, transport, storage, treatment, and disposal of HCRW. For this contract, it will also include the supply and distribution of disposable containers as well as the supply, distribution and maintenance of reusable containers, durable items, freezers and scales.
HCRW Management System	Means collectively the supply (and maintenance where applicable) of durable equipment, freezers, scales, disposable containers, reusable containers, the collection, transport, treatment and disposal of HCRW as specified in the contract specification.
HCRW Vehicles	Means the vehicles used by the service provider to transport HCRW.
HCWO	Means a person trained in HCW management and authorised for each HCF to verify and sign the manifest document confirming the volume / mass of HCRW collected in accordance with the manifest system, gather data and report on HCRW management related matters. The HCW Officer (HCWO) is also the Service provider's contact person at HCF level.



GAUTENG PROVINCE
HEALTH
REPUBLIC OF SOUTH AFRICA

Health Care Facility	Means a Provincial Hospital, Clinic, Community Health Centre, Forensic Pathology, NGO's, Dentals or any other HCF included in the list of HCFs (Annexure 7).
Health Care Risk Waste	HCRW shall, for the purpose of this contract, be considered to include: • General Infectious HCRW; • Sharps HCRW; • Chemical HCRW • Pathological HCRW; • Pharmaceutical HCRW; • Isolation HCRW; Excluding radioactive waste.
Health Care Waste	Includes Health Care Risk Waste (HCRW) and Health Care General Waste
Hinge pin	A jointed device or flexible piece on which a door, gate, lid, or other attached part turns, swings, or moves.
Implementation Period	Means for each HCF the period from when an HCF start using elements of the new HCRW management system until the new HCRW management system is fully implemented at that HCF.
Incineration	Is a HCRW treatment method by means of combustion that will convert the HCRW into ash.
Landfill	Means a facility for disposal of waste on land, whether by use of waste to fill in excavations or by creation of a landform above ground, where the term 'fill' is used in the engineering sense.
Laser X-ray film	Means laser film that is used in radiography imaging. Processing can be dry or wet.
Manifest document	Means the documentation required as part of the manifest system for the detailed recording of all HCRW collected and treated from individual HCFs
Medicine/Pharmaceutical	Means any substance or mixture of substances used or purporting to be suitable for use or manufacture or sold for use in the diagnosis, treatment, mitigation, modification or prevention of disease, abnormal physical or mental state or the symptoms thereof in humans; or restoring, correcting, modifying any somatic, physic, or organic function in humans.
Mobilisation Period	Means an uninterrupted period of 1 month commencing on the contract date.
Occupational Health and Safety Committee	A collaborative group of employer and employee representatives mandated by Sections 19 and 20 of the

	Occupational Health and Safety, 1993 (Act No. 85 of 1993) (OHASA) and in Section 26 of the contract specifications.
Penalties	Means imposing of a financial liability on the contactor when service failures occurred during the execution of the contract that was reported by the HCWO of any HCF, HCWC or Department Representative. Penalties are deducted from annually as per DR in accordance with Section 27 and 28 of the specification.
Planned Outage	Means any shutdown or stoppage affecting the operating capacity of the treatment plant or any part thereof, which is planned and of which the Department's Representative has been notified in writing, no later than 1 month before its occurrence.
Polypropylene/ polyethylene	Means types of plastic that are used in the manufacturing of HCRW containers.
QSE	A qualifying small business enterprise in terms of the code of good practice on black economic empowerment issued in terms of section 9(1) of the Broad-Based Black Economic Empowerment Act
Province	Means Gauteng Province of the Republic of South Africa.
Replacement Cost	Means the cost of replacing a reusable container lost or severely damaged while in the care of a HCF.
Residues	Means any solid or liquid product derived from the treatment of HCRW at the treatment plant.
Reusable Container	A container manufactured for reuse
Rollout	Means for each HCF the process of implementing the new HCRW management system.
Rollout Completion Date	Means the date occurring 3 months after the date referred to on the written request for a rollout at a specified facility.
Rollout Period	Means the period specified in paragraph 4.25 following written notification to the Service provider to finalize a required rollout for the specified HCFs.
Scheduled Substances	Means medicines prescribed by the Minister of Health under Section 22A of Medicines and Related Substances Control Act, Act 101 of 1965.
Service Failure	Means the Service provider's failure to comply with any certain requirements of the contract. Service failures are defined in Section 28 of the contract specification.
Services	Means the services, duties and obligations to be fulfilled by the service provider in accordance with this contract specification throughout the services period.



GAUTENG PROVINCE
HEALTH
REPUBLIC OF SOUTH AFRICA

Shredding	Means the process where sterile HCRW is mechanically transformed into an unrecognisable mixture of solid and fibrous matter.
Specican Container	Means a red, disposable puncture resistant container specifically designed for use in the HCRW industry used for containerisation of pathological HCRW which, when sealed, cannot be opened without great difficulty, and which is spill proof under normal handling conditions, used for the storage and transport of infected pathological HCRW. This container should be able to withstand temperatures down to -15°C.
Statutory Requirements	Means the requirements of any present or future legislation, ordinance, proclamation, bylaw, directive, decision, regulation, rule, order, notice or code of practice having the force of law in the province.
Stickers	A piece of printed paper or plastic with pressure sensitive adhesive on one side.
Transponder	Means a short description used for a transmitter-responder and is an electronic device that produces a response when it receives a radio-frequency interrogation. The transponder works on a radio frequency.
Transporter	Means a person, organisation, industry, or enterprise engaged in or offering to engage in the transportation of HCRW. For this contract a transporter shall be registered with the Gauteng Department of Agriculture and Rural Development as well as the local authorities in whose area of jurisdiction it proposes to operate.
Treatment/Destruction	Means any method, technique, or process designed to change the biological character or composition of any HCRW to eliminate its potential for causing disease, pollution impact on the environment and risk to health and to render it unrecognisable.
Tracking system	Tracking systems include individual tracking of containers, delivered or collected, software and hardware as well as any management requirements of the system such as updates, maintenance and any action required to ensure a fully functional tracking system. Bar-code systems require a person to scan items. Tracking consists of discrete hardware and software systems for different applications.
Treatment Plant	Means the plant or plants used by the service provider for treatment of HCRW and registered as such with DEFF and GDARD.



GAUTENG PROVINCE
HEALTH
REPUBLIC OF SOUTH AFRICA

Unit Price	Means the total weight of the waste per container, expressed in kg (Minus the container weight for reusable containers), as specified in the schedule of rates and quantities.
Unplanned Outage	Means any breakdown, stoppage, interruption, outage, or cessation of, in or affecting the operating capacity of the treatment plant which occurs, other than as a consequence of a planned outage.
Waste Information Regulations	Means the National Environmental Management: Waste Act, 2008 (Act No. 59 Of 2008): National Waste Information Regulations (G 35583 – Gov. No. 625) 13 August 2012
Waste Information System	Means a system comprising of at least a register of the information submitted in terms of the Waste Information Regulations promulgated by GDARD, in a format which is accessible to the public, and which, amongst other things, facilitates an on-line search for information pertaining to waste in the Gauteng province.
Wheel hub	The central part of a wheel into which the spokes are inserted.
Wheelie Bins	Container with wheels and a hinged lid used for holding refuse.

1. LEGISLATIVE AND REGULATORY FRAMEWORK

1.1. The General Conditions of Contract (GCC):

This bid and all contracts emanating from this tender will be subjected to the General Conditions of Contract (GCC), as issued by National Treasury in accordance with Treasury Regulation 16A published in terms of the Public Finance Management Act (PFMA), 1999 (Act No. 1 of 1999). The general conditions are available on the National Treasury website (www.treasury.gov.za).

1.2. The Special Conditions of Contract (SCC):

The Special Conditions of Contract (SCC) are supplementary to that of the General Conditions of Contract. Where the Special Conditions of Contract conflict with the General Conditions of Contract, the Special Conditions of Contract shall prevail.

1.3. Applicable legal Frameworks, Acts & Regulations:

- National Environmental Management: Waste Act, 2008 (Act No. 59 of 2008), as amended
- Gauteng Health Care Waste Management Regulations, 2004.
- Gauteng Waste Information Regulations, 2004.
- Hazardous Substances Act, 1973 (Act No. 15 of 1973)
- Medicines and Related Substances Control Act, 1965 (Act No. 101 of 1965), as amended. (Medicines and Related Substances Amendment Act 59 of 2002).
- National Health Act, 2003 (Act No. 61 of 2003)
- National Road Traffic Act, 1996 (Act No. 93 of 1996)
- National Road Traffic Amendment Act, 1998 (Act No. 8 of 1998)
- National Water Act, 1998 (Act No. 36 of 1998)
- Nursing Act, 2005 (Act No. 33 of 2005)
- Occupational Health and Safety Act, 1993 (Act No. 85 of 1993)
- Pharmacy Act, 1974 (Act No. 53 of 1974)
- The Constitution of the Republic of South Africa, 1996 (Act No. 108 of 1996)
- Waste Classification and Management Regulations, 2013
- Hazardous Waste Electrical and Electronic Equipment, Government Gazette, No. 10008, Volume 578, No. 36784, dated 23 August 2013.
- Waste Management By-laws of Johannesburg Metropolitan Council and Tshwane Metropolitan Council of the Municipal Systems Act, 2000 (Act No. 32 of 2000)
- South African National Standards (SANS) 10228: 2006: The identification and classification of dangerous goods for transport
- SANS 10229-2: 2010: Transport of dangerous goods – Packaging and large packaging for road and rail transport. Part 2: Large packaging

- SANS 10232: 2008: Transport of Dangerous Goods – Inter-mediate Bulk Containers for Road and Rail Transport.
- SANS 10248: 2004: Management of Health Care Waste.
- SANS 10248-1: 2008: Management of Health Care Waste – Part 1: Management of health care risk waste from a health care facility.
- SANS 10248-2: 2009: Management of healthcare waste - Part 2: Management of healthcare risk waste for healthcare facilities and healthcare providers in rural and remote settings.
- SANS 10248-3: 2011: Management of healthcare waste Part 3: Management of healthcare risk waste from minor generators - Registered healthcare professionals and non-healthcare professionals.
- SANS 1494: 2014: Two-wheeled mobile refuse bins.
- SANS 452: 2008: Non-reusable and reusable sharps containers.
- United Nations Recommendations on the Transport of Dangerous Goods, Chapter 6.
- Safe management of wastes from health care activities - World Health Organisation 1999.
- Guidelines for the destruction of Scheduled Medicines, Council rules relating to good Pharmacy Practice, The South African Pharmacy, Board Notice 34 of 2012, Government gazette No. 35095 13, 2 March 2012 (Medical Control Council).
- National Waste Management Strategy – DEA 2011
- National norms and standards for the storage of waste, 2013
- National norms and standards for disposal to landfill, 2013
- South African Health Products Regulatory Authority (SAHPRA)

2. THE FORMAT OF THE BID DOCUMENT

The bidders must submit the bid in a lever arch file / envelope in the format, as per Table 1 below.

Table 1: The Bid Format

Part of Bid Submission	Required documents
Part 1	**Section 1: Technical Proposal of the tender.** All the documents included in Section 1 must be read, completed, signed where applicable and submitted. Product information documents (e.g. catalogues, operating manuals, instruction leaflets, etc.), in at least the English language. **Below is the list of returnable documents:** a. Proof of Bidder's treatment/storage facility -

GAUTENG PROVINCE
HEALTH
REPUBLIC OF SOUTH AFRICA

	i. If the Bidder is the **owner of the treatment/storage facility**, they must submit a copy of a valid Department of Forestry, Fisheries and Environment (DFFE) licence/permit for treatment and storage **OR** ii. If the Bidder **outsources the treatment/storage facility**, they must submit a copy of an Agreement/affidavit signed by both parties. The bidder must also submit a copy of the outsourced facility's DFFE license/permit for the treatment and storage. b. Bidder must submit a copy of their valid permit and certificate for **Transporter Authorisation**, issued by the Gauteng Department of Agriculture and Rural Development (GDARD). The authorisation of the bidder must be valid closing date of the bid. c. Bidder must submit a copy of their valid **Effluent Water compliance** permit or letter, issued by the relevant local government or authority, in line with treatment facility submitted under point 'a' above. d. Bidder must submit a valid original certified copy of their South African Waste Information System (SAWIS) or Gauteng Waste Information System (GWIS) registration certificate, in line with treatment facility submitted under point 'a' above. e. Bidder must submit a copy of their valid **Atmospheric Emission Licence (AEL)**, issued by a relevant municipality or licensing authority, to ensure legal compliance, in line with treatment facility submitted under point 'a' above. The requirement applies to waste treatment technologies involving combustion processes, such as incineration. f. Appointment letter of **Pharmacist**, certified copy of ID, certified copy of registration at South African Pharmacy Council and valid proof of membership, in line with treatment facility submitted under point 'a' above. g. Bidder must submit proof of **Liability Insurance Cover** of not less than R5 million, issued by an insurance company registered and authorised to operate in South Africa. h. All SBD's must be read, completed, signed where applicable and submitted. i. SBD 1: Invitation to Bid ii. SBD 4: Bidder's Disclosure i. Bidder must submit a duly completed and signed GPG Integrity Pact for Businesses. j. Tax Clearance Requirements A printout via SARS e Filing of the valid Tax Compliance Status (TCS) PIN, must be submitted with the bid documents at the closing date and time of the bid. In bids where consortia, joint ventures and sub-service providers are involved, each party must submit a separate PIN. The PIN, which is issued by the South African Revenue Services, can be used by third parties to verify the compliance status of the bidder online via SARS e Filing.



GAUTENG PROVINCE
HEALTH
REPUBLIC OF SOUTH AFRICA

	k. Latest audited financial statements for the last two years. l. Copy of Central Supplier Database (CSD) Registration Summary Report m. Bidder must provide a valid copy of manufacturers license or wholesalers license from SAHPRA in the name of the manufacturer or wholesaler prior to award or a letter of intent proving that the bidder has agreement with the manufacturer or wholesaler. The SAHPRA license will provide the list of items authorized to distribute.
Part 2	**All the supporting documents of proof required for the Functionality Evaluation:** a. Confirmation of wash bay at treatment plant or verification of location of wash bay. Bidder to attach photographs/pictures with a minimum of two-minute video clip on a USB demonstrating proper functional treatment plant, as per the TOR. b. Contingency plan document addressing failure of all-inclusive services covering collection including transportation, treatment, final disposal of residue, disposal storage area for HCRW. c. Verification of decontamination systems and chemicals used for this purpose, minimum decontamination systems required. Bidder to submit Standard Operating Procedure (SOP) addressing, Decontamination procedure and Chemicals (including drying procedures) used for reusable containers. d. Bidder to provide contractual proof of previous contracts at a value of not less than R10 million, as a record of accomplishment in the management of medical waste in the public or private sector within South Africa. e. Bidder to demonstrate knowledge and understanding of Health and Safety policy by submitting Health and Safety file as required by OHS Act, (Act No.85 of 1993). f. Bidder to demonstrate availability of valid a PrDP and permit for transporting hazardous goods (dangerous goods licence). g. Bidder to demonstrate training services requirements as proof of existence of training agreement. h. Bidder must submit a confirmation letter that they will be manufacturing such products offered to the Department. The confirmation letter must list all items offered and state that the offer shall be for the duration of the contract. In the case where products are not produced/manufactured by the bidder. The bidder must provide a letter of intent or agreement from the source of supply (manufacturer, wholesaler, or distributor) confirming continued supply of the offered products for the duration of the contract. Such letter/agreement shall be duly signed by an authorised representative of the source of supply. One or more letters/agreements covering all offered items will be accepted.

	NB: Complete returnable supporting documentation refer to Functional Evaluation (Table 1 of Annexure 1)
Part 3	**Section 2: Financial Proposal of the tender.** **Completed Price Schedule documents, refer to Annexure A of Terms of Reference.** a. SBD 3.3: Price Schedule – Professional Services b. Annexure A1-5: Price Schedule (dependent on bidder's chosen District) c. SBD 6.1: Preference Points Claim Form in terms of the Preferential Procurement Regulations 2022

3. PURPOSE

To appoint a qualified service provider for the provision of Health Care Risk Waste (HCRW) management services to Gauteng Health Institutions for a period of 36 months, ensuring compliance with all applicable legislative requirements and achieving end-user satisfaction.

4. SCOPE OF WORK

The appointed bidder will be responsible for a comprehensive "cradle-to-grave" management system for Health Care Risk Waste, covering all stages from waste generation to final disposal. The service must include:

a. Containerisation of HCRW at healthcare facilities.
b. Collection of HCRW from all designated sites.
c. Transportation of HCRW in accordance with legal and safety requirements.
d. Treatment of HCRW using approved methods.
e. Final disposal of treated waste at authorised disposal facilities.
f. Clean-up of illegal dumping of HCRW generated by the HCFs
g. Clean-up of waste classified as healthcare risk waste from any fire incident and/or natural disasters
h. Clean-up of waste during upliftment of HCRW services
i. Provision of disposable items
j. Provision of durable items
k. Provision of reusable containers
l. Barcode tracking and tracing of all HCRW containers throughout the waste management process.
m. Healthcare waste (HCW) training for relevant personnel.



GAUTENG PROVINCE
HEALTH
REPUBLIC OF SOUTH AFRICA

NOTE: *The service providers shall in the process of rendering the services, be liable for damage done to the Department's property, dumping and lost or stolen HCRW during or after transportation. Any durable and disposable items provided during this contract period will remain the property of the Department*.

4.1. The Health Care Facilities (HCFs)

The service providers shall service all HCFs for the awarded districts indicated in the list of HCFs as presented in Annexure 1. The types of HCFs included are:

a. Specialised Hospitals
b. Dental Hospitals
c. District Hospitals
d. Regional Hospitals
e. Tertiary Hospitals
f. Central / Academic Hospitals
g. Community Health Centres (CHC)
h. Primary Health Centres (PHC)
i. Emergency Medical Services (EMS)
j. Forensic and Pathology Services (FPS)
k. Pharmacies
l. Laundries
m. Colleges
n. Travel clinic
o. Wellness clinic
p. Medical Supplies Depot
q. Any other facility operated or funded (such as NGOs) by the Department or under its jurisdiction.

4.2. Segregation and Containerization of HCRW

HCRW is considered the hazardous component of HCW generated in all HCFs. The following types of HCRW shall be segregated and containerised at the point of generation: Radio-active HCRW is excluded from the scope of this contract.

4.2.1. Infectious HCRW

Infectious HCRW means waste which is suspected to contain pathogens, and which normally causes or significantly contributes to the cause of increased morbidity or mortality of human beings but excludes sanitary pads and baby nappies which are not isolation waste. Examples include items such as blood-contaminated dressings, contaminated diapers, soiled mattresses, soiled pillows, gloves or any other disposable items suspected of being infectious or that have been in contact with bodily fluids. Infectious HCRW should be containerised in durable and reusable containers lined with red liners by the HCF staff at the point of generation. However, bio-hazard cardboard boxes may be used during special events such as mass campaigns.



GAUTENG PROVINCE
HEALTH
REPUBLIC OF SOUTH AFRICA

Mattresses and pillows which are redundant and/or soiled with any bodily fluids may be removed from HCFs in red liners and sealed with bio-hazard tape or cable ties.

4.2.2. Sharps HCRW

Sharps HCRW means waste having acute rigid corners, edges or protuberances capable of cutting or piercing including but not limited to the following

a. Hypodermic needles, syringes, blades and needles with or without attached tubing and
b. Broken glass items (Excluding cutlery and catering equipment), such as Pasteur pipettes and blood vials contaminated with health care risk waste. Sharps HCRW should be containerised in yellow sharps containers by the respective HCFs at the point of generation.

4.2.3. Pathological HCRW

Pathological HCRW includes the following:

Deceased animals or animal parts infected with zoonotic diseases, human and animal tissues, organs, body parts, blood, fluid blood products and body fluids containers or equipment containing blood that is fluid or blood from animals known or suspected to be infected with any zoonotic diseases and Human foetuses but excludes teeth, hair and nails, pathological waste should be containerised in red specican containers and must be stored at a temperature below -2°C if not collected within 24hours of generation.

4.2.4. Pharmaceutical HCRW

Pharmaceutical HCRW means pharmaceutical products and medicinal chemicals that are no longer usable in human or animal treatment and that have become outdated and contaminated or are no longer required, it also includes items contaminated with cytotoxic pharmaceuticals, liquid or solid expired unused or contaminated medicines and residues of medicines from schedules 0 – 6 that are no longer usable as medication. For this contract specification, cytotoxic / genotoxic HCRW is included in this category. Pharmaceutical HCRW should be containerised in dark green pharmaceutical containers by the respective HCFs, prior to collection by the service provider. Cytotoxic waste must be disposed in dark green waste containers and clearly marked “cytotoxic waste” at the point of generation.

4.2.5. Isolation HCRW

Isolation HCRW includes waste containing discarded materials contaminated with excretions, exudates, or secretion from humans or animals who or which are required to be isolated (by infection control staff, the attending physician or surgeon, the attending veterinarian or the local health practitioner) in order to protect others from highly communicable or zoonotic diseases, generated in isolation wards where patients with highly contagious illnesses (such as viral haemorrhagic fevers and other formidable diseases,) are treated.



All waste (including Health Care General Waste) generated in isolation wards is considered isolation HCRW and should be double bagged, sealed and placed into bio-hazard cardboard boxes.

4.2.6. Chemical Waste

Chemical waste means waste which consists of discarded solid, liquid and gaseous chemicals including but not limited to pharmaceutical waste, hazardous waste from diagnostic and experimental work and hazardous waste from cleaning, housekeeping and disinfecting procedures. Chemical HCRW can include toxic, corrosive, flammable liquids, solids and gases such as mercury thermometers, UVG devices, fluorescent tubes, lead aprons, laser x-ray film, developers, fixers and any abandoned / unrecognisable chemicals, and chemical containers. Chemical waste must be disposed in dark green containers clearly marked “chemical waste”. Chemicals can also be collected in their original containers.

4.3. Type and Supply of Durable Items

The service provider shall be responsible for the supply, installation and maintenance of durable items at HCFs including:

a. Sharps wall brackets
b. Nursing trolley sharps brackets
c. Nursing trolley baskets with lids
d. Wall Baskets with lids
e. Free standing racks with lids
f. Plastic brackets with lids
g. Kick-about trolleys
h. Freezers
i. HCRW Internal trolley
j. Central storage Signage

With reference to the above-mentioned, the service provider shall, where required by the HCFs, supply and install all durable items. Any damages resulting from these activities will be the responsibility of the service provider except where gross negligence from the HCF occurs. The service provider shall obtain written guidance from the HCFs where to install/place/fix/replace such durable items and these must be specified in a signed equipment plan. No installation may take place without an approved equipment plan. In addition to this, the service provider will be required to make use of appropriate electronic devices to detect any water or gas pipes, electric wires/cables or any other services that may be located beyond the wall surface in HCFs to prevent any possible damage. Particular attention should be given during installation of durable items in HCFs equipped with dry-wall partitioning, to ensure that durable items will remain secured throughout the service period.



GAUTENG PROVINCE
HEALTH
REPUBLIC OF SOUTH AFRICA

In all instances, the service provider will be responsible for the repair/reinstallation of any durable items that detach from walls or did not remain serviceable for the service period, with unused holes repaired and wall finishes reinstated to match the existing wall. The service provider should maintain all previously installed durable items.

The service provider is required to provide a full range of samples of durable items to the HCW sub-directorate. All durable items shall be delivered following a written order from the HCF or the departmental representative (DR). Transportation, delivery, and installation cost will form part of the fixed price per item. Once supplied and installed by the service provider, all durable items shall become the property of the Department.

NOTE: *Bidders will be required to provide/present samples for evaluation by the bid evaluation committee (BEC). Specification for durable items are covered on the next section below.*

4.3.1. General Requirements for Durable Items

Durable items available for this contract period are described in the table below for ease of reference and clear guidance.

GAUTENG PROVINCE
HEALTH
REPUBLIC OF SOUTH AFRICA

GT/GDH/050/2026 APPOINTMENT OF SERVICE PROVIDERS TO RENDER CCOMPREHENSIVE HEALTHCARE RISK WASTE MANAGEMENT SERVICES FOR THE GAUTENG DEPARTMENT OF HEALTH INSTITUTIONS FOR A PERIOD OF 36 MONTHS

Table 2: Summary of Durable Items

ITEM NAME	ITEM DESCRIPTION AND DIMENSIONS	COLOUR REQUIREMENT	COMPATIBILITY	ADDITIONAL REQUIREMENTS AND DIMENSIONS	FIGURE NUMBER	TESTING REQUIREMENT/ COMPLIANCE STANDARD
a. Sharps wall bracket	**Material:** manufactured from 3CR12 stainless steel **Surface:** Smooth, polished and no cutting splinters **Wall Plate**: uniform design with a standard screw pattern.	Stainless steel finishing	7.6L sharps container (Rectangular)	N/A	1	Verification certificate of 3CR12 stainless steel with the sample delivered.
b. Nursing trolley sharps bracket	**Material:** manufactured from 3CR12 stainless steel **Surface:** Smooth, no cutting splinters	Stainless steel finishing	7.6L sharps container (Rectangular)	Effectively be hanged or clipped onto nursing trolleys. May require special fitment.	2	Verification certificate of 3CR12 stainless steel with the sample
c. Wall basket	**Material:** manufactured from 3CR12 stainless steel	Stainless steel finishing	40L red liner	N/A	3	Verification certificate of 3CR12 stainless steel with the sample delivered.

GAUTENG PROVINCE
HEALTH
REPUBLIC OF SOUTH AFRICA

GT/GDH/050/2026 APPOINTMENT OF SERVICE PROVIDERS TO RENDER CCOMPREHENSIVE HEALTHCARE RISK WASTE MANAGEMENT SERVICES FOR THE GAUTENG DEPARTMENT OF HEALTH INSTITUTIONS FOR A PERIOD OF 36 MONTHS

	Surface: Smooth, no cutting splinters **Wall Plate:** uniform design with a standard screw pattern.					
d. Nursing trolley basket	**Material:** manufactured from 3CR12 stainless steel Surface: Smooth, no cutting splinters	Stainless steel finishing	40L red liner	Effectively be hanged or clipped onto nursing trolleys. May require special fitment.	4	Verification certificate of 3CR12 stainless steel with the sample delivered.
e. Free standing Rack (wheeled)	**Material:** manufactured from 3CR12 stainless steel **Surface:** Smooth, no cutting splinters	Stainless steel finishing	85L red liner	Wherever bolts and nuts are used for the fixing of wheels, an approved nut locking system is to be provided to prevent the nuts from becoming loose. The wheel fitting mechanism must be made from 3CR12 stainless steel (No plastic fitting mechanisms shall be allowed) Wheels should be fitted with a functional braking system	5	Verification certificate of 3CR12 stainless steel with the sample delivered.

GAUTENG PROVINCE
HEALTH
REPUBLIC OF SOUTH AFRICA

GT/GDH/050/2026 APPOINTMENT OF SERVICE PROVIDERS TO RENDER CCOMPREHENSIVE HEALTHCARE RISK WASTE MANAGEMENT SERVICES FOR THE GAUTENG DEPARTMENT OF HEALTH INSTITUTIONS FOR A PERIOD OF 36 MONTHS

f. Plastic bracket	**Material:** Polypropylene Sasol CMR648 or polyethylene.	Red	30L red liners with handles	Effectively be hanged, clipped or fixed. onto nursing trolleys and walls. Subjected to testing at a independent accredited laboratory for the ability to carry weight as well as a drop test of 5 kg and temperature resistance of up to -15ºC.	9	Verification certificate of Sasol CMR648
g. Wall mounted Basket, freestanding rack, nursing trolley basket and bracket lids	**Material:** Polypropylene or polyethylene. Surface: Smooth, no cutting edge.	Red	Wall mounted basket, Freestanding rack, nursing trolley baskets and plastic bracket	Black biohazardous symbol embossed as stipulated in SANS 10248. Lid must not bend or be mis-shaped.	6, 7, 8	
h. Kick-about	**Material:** manufactured from 3CR12 stainless steel **Surface:** Smooth, no cutting edge	Stainless steel finishing	To fit 10 and 20 litre sharps or pathological waste containers and 30L red liner	Pins/ hooks should be affixed to be able to hold/ secure the red liner It should be affixed with a support mechanism at the bottom to hold the containers/liners	10	Verification certificate of 3CR12 stainless steel with the sample delivered.

GAUTENG PROVINCE
HEALTH
REPUBLIC OF SOUTH AFRICA

GT/GDH/050/2026 APPOINTMENT OF SERVICE PROVIDERS TO RENDER CCOMPREHENSIVE HEALTHCARE RISK WASTE MANAGEMENT SERVICES FOR THE GAUTENG DEPARTMENT OF HEALTH INSTITUTIONS FOR A PERIOD OF 36 MONTHS

				Should be fitted with a set of four wheels		
i. HCRW internal transport trolley	**Material:** Galvanized steel/aluminium	Red coated galvanized steel/aliminium	Compatible with all HCRW containers	As per the technical specifications for trolleys. This document will be provided	11	Verification certificate of galvinised steel/aluminium for the sample delivered.

GAUTENG PROVINCE
HEALTH
REPUBLIC OF SOUTH AFRICA

Figure 1 : Wall sharps container brackets

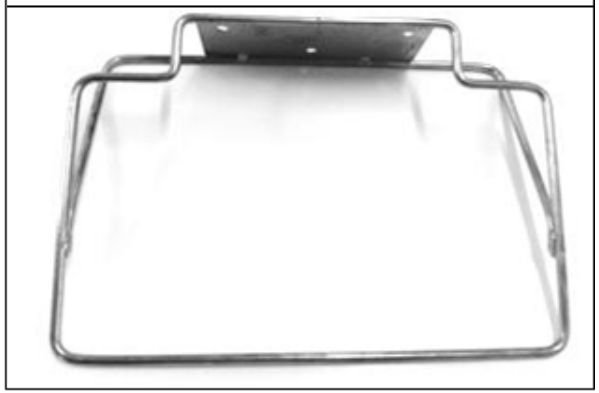

Note: Patent rights must be negotiated out of contract with the respective patent holder.
(Drawings not to scale)

GAUTENG PROVINCE
HEALTH
REPUBLIC OF SOUTH AFRICA

GT/GDH/050/2026 APPOINTMENT OF SERVICE PROVIDERS TO RENDER CCOMPREHENSIVE HEALTHCARE RISK WASTE MANAGEMENT SERVICES FOR THE GAUTENG DEPARTMENT OF HEALTH INSTITUTIONS FOR A PERIOD OF 36 MONTHS

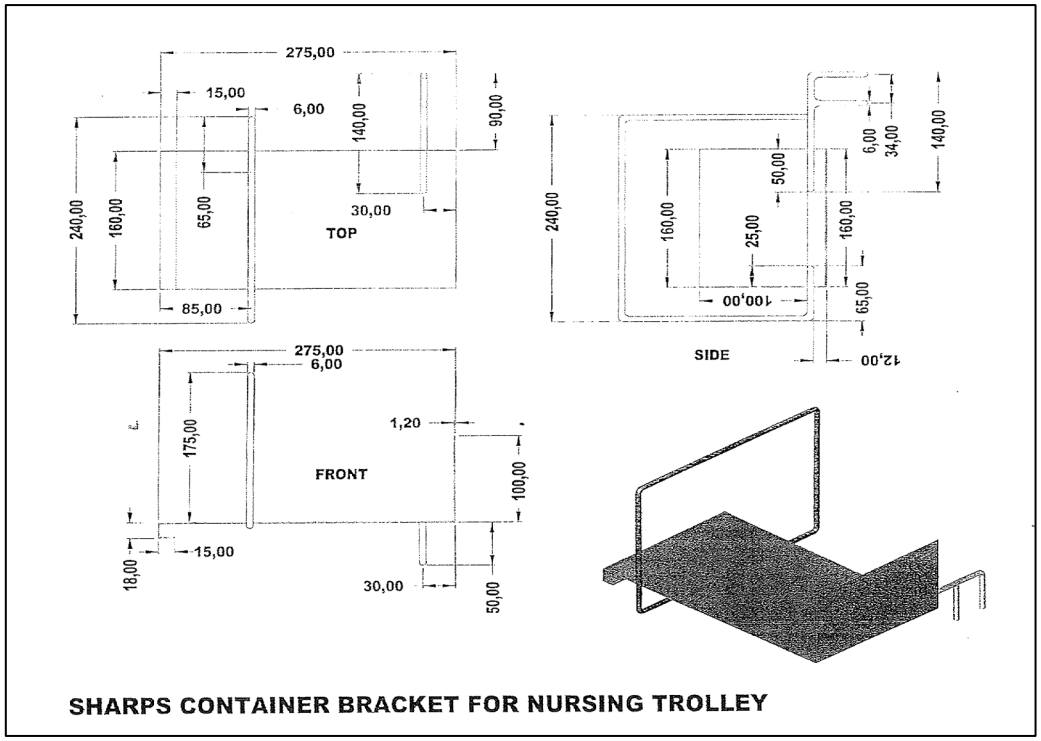

Figure 2: Nursing-trolley sharps bracket for rectangular shape sharps

NOTE: *Patent rights must be negotiated out of contract with the respective patent holder.*
(Drawings not to scale)

GAUTENG PROVINCE
HEALTH
REPUBLIC OF SOUTH AFRICA

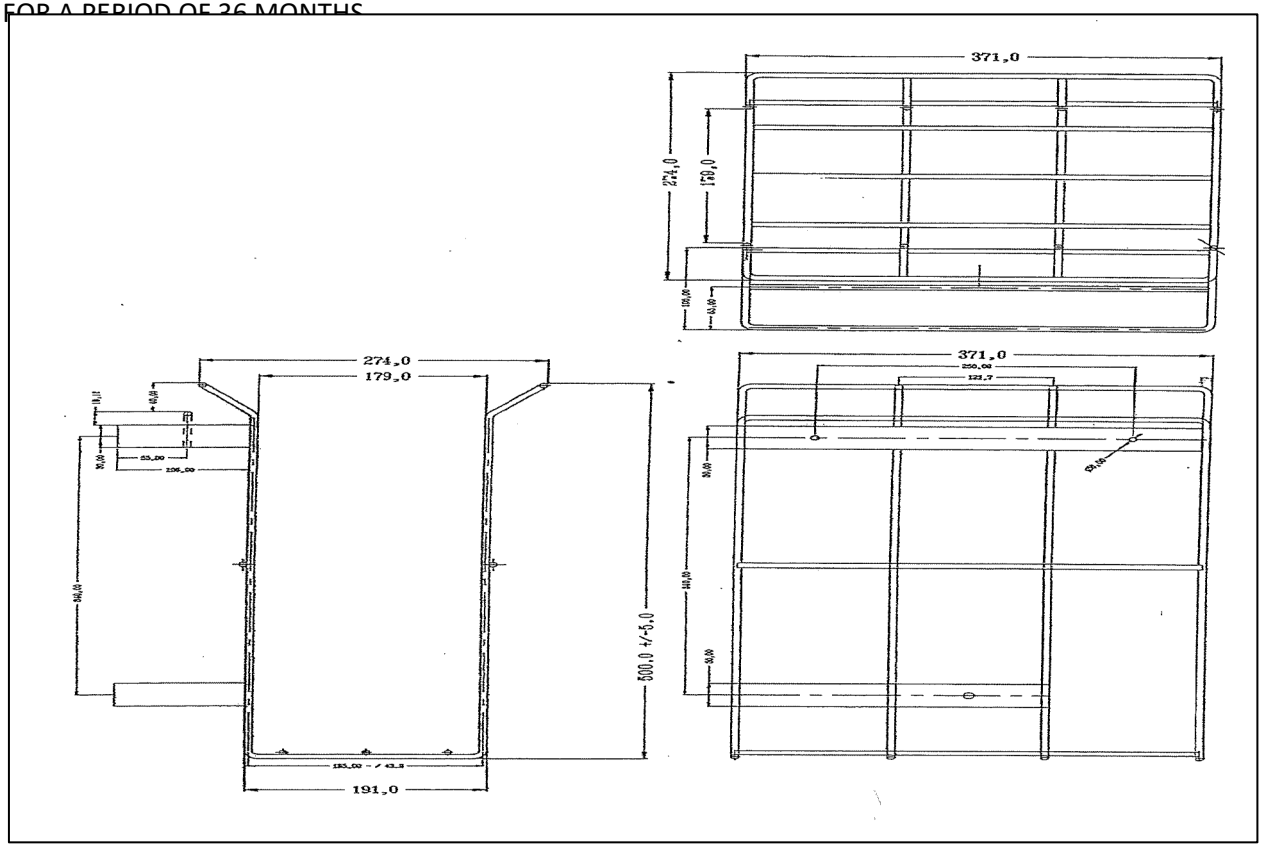

Figure 3: Wall mounted basket

Note:

1) All dimentions are in millimeters.

2) All material 3Cr12 stainless steel

3) Dimensionale tolerance +/- 3mm

4) Inside bend radius: flats 3mm >r< 10 mm; rods 10 mm >r< 15 mm

GAUTENG PROVINCE
HEALTH
REPUBLIC OF SOUTH AFRICA

GT/GDH/050/2026 APPOINTMENT OF SERVICE PROVIDERS TO RENDER CCOMPREHENSIVE HEALTHCARE RISK WASTE MANAGEMENT SERVICES FOR THE GAUTENG DEPARTMENT OF HEALTH INSTITUTIONS FOR A PERIOD OF 36 MONTHS

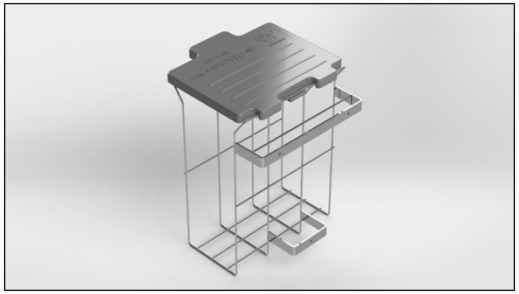

NOTE: *Lid and design of basket must be correlated and or adjusted to get a good fit.*
Patent rights must be negotiated out of contract with the respective patent holder.
(Drawings not to scale)

Figure 4: Nursing trolley basket

The basic design for the wall basket can be followed by the additional detail as illustrated below**.**

GAUTENG PROVINCE
HEALTH
REPUBLIC OF SOUTH AFRICA

GT/GDH/050/2026 APPOINTMENT OF SERVICE PROVIDERS TO RENDER CCOMPREHENSIVE HEALTHCARE RISK WASTE MANAGEMENT SERVICES FOR THE GAUTENG DEPARTMENT OF HEALTH INSTITUTIONS FOR A PERIOD OF 36 MONTHS

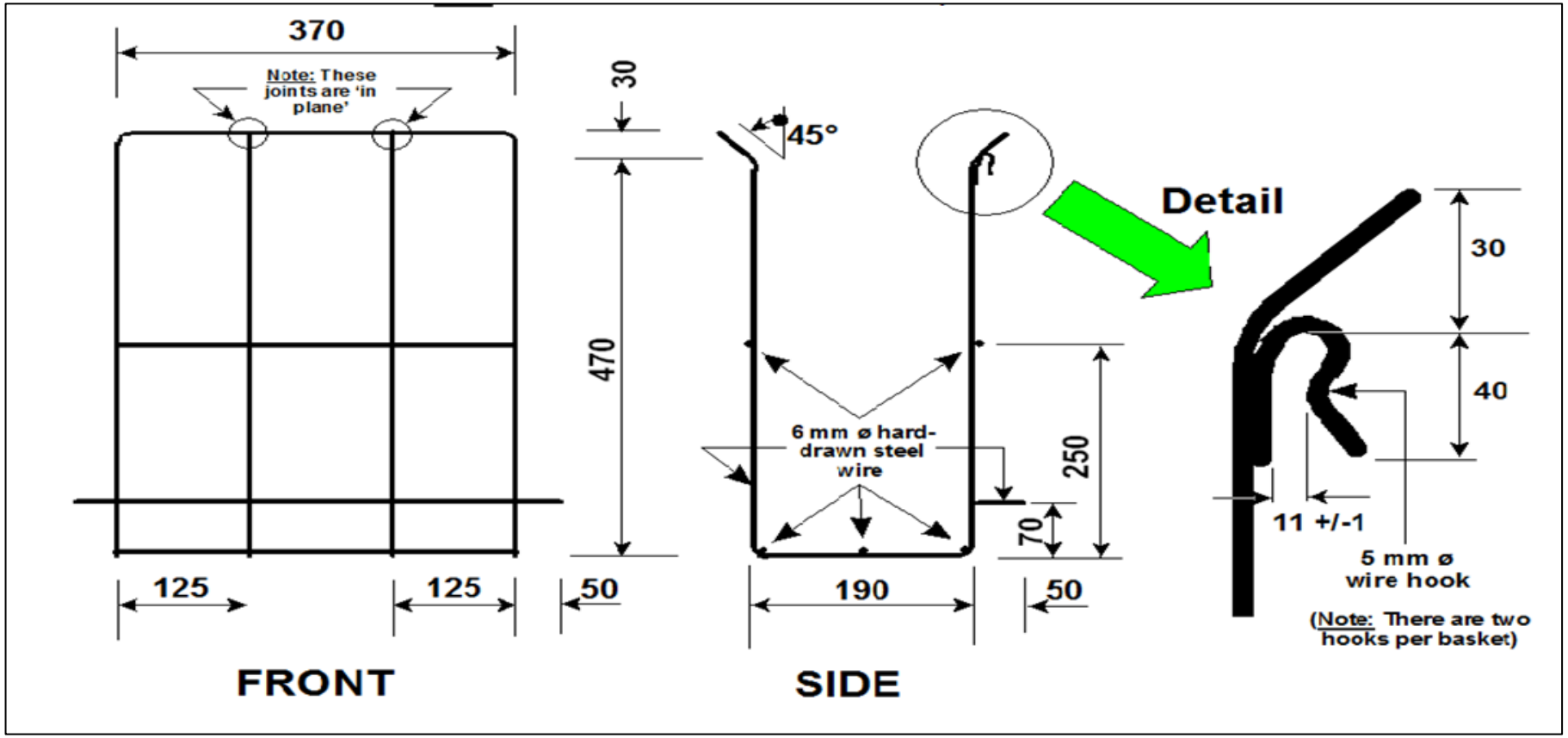

NOTE: *Patent rights must be negotiated out of contract with the respective patent holder.*
(Drawings not to scale)

GAUTENG PROVINCE
HEALTH
REPUBLIC OF SOUTH AFRICA

GT/GDH/050/2026 APPOINTMENT OF SERVICE PROVIDERS TO RENDER CCOMPREHENSIVE HEALTHCARE RISK WASTE MANAGEMENT SERVICES FOR THE GAUTENG DEPARTMENT OF HEALTH INSTITUTIONS FOR A PERIOD OF 36 MONTHS

Figure 5: Free standing rack for HCRW liner – 85 lt



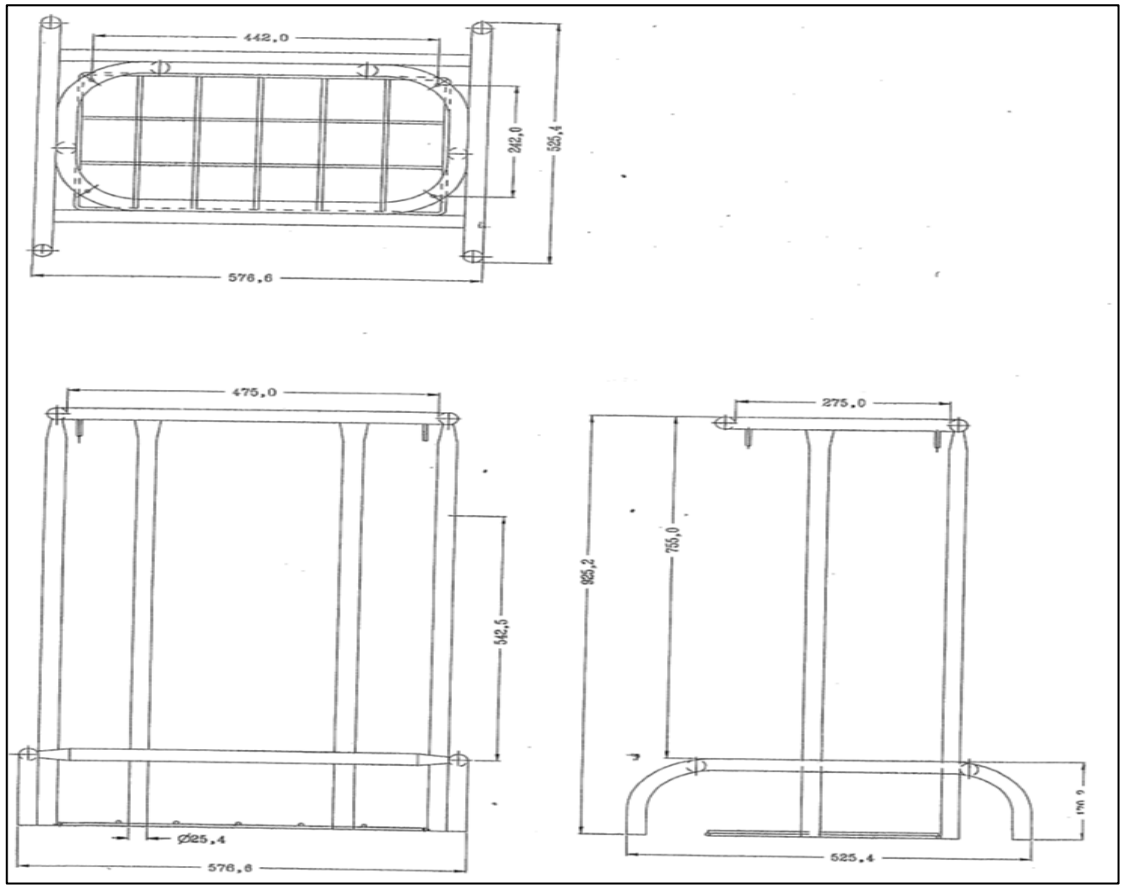

GAUTENG PROVINCE
HEALTH
REPUBLIC OF SOUTH AFRICA

GT/GDH/050/2026 APPOINTMENT OF SERVICE PROVIDERS TO RENDER CCOMPREHENSIVE HEALTHCARE RISK WASTE MANAGEMENT SERVICES FOR THE GAUTENG DEPARTMENT OF HEALTH INSTITUTIONS FOR A PERIOD OF 36 MONTHS

NOTE: *Patent rights must be negotiated out of contract with the respective patent holder.*
(Drawings not to scale)
(Alternative designs will be considered)

Figure 6: Lids for wall mounted basket

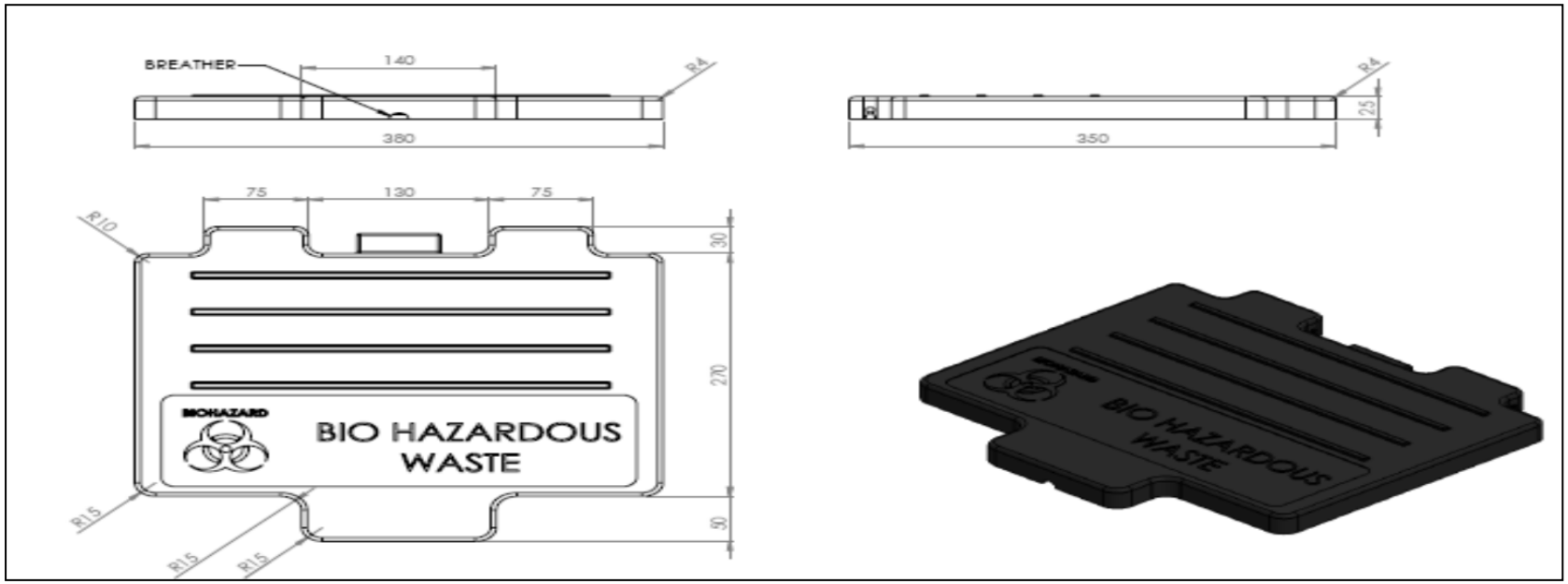

NOTE: *Patent rights must be negotiated out of contract with the respective patent holder.*
(Drawings not to scale)

GAUTENG PROVINCE
HEALTH

THE

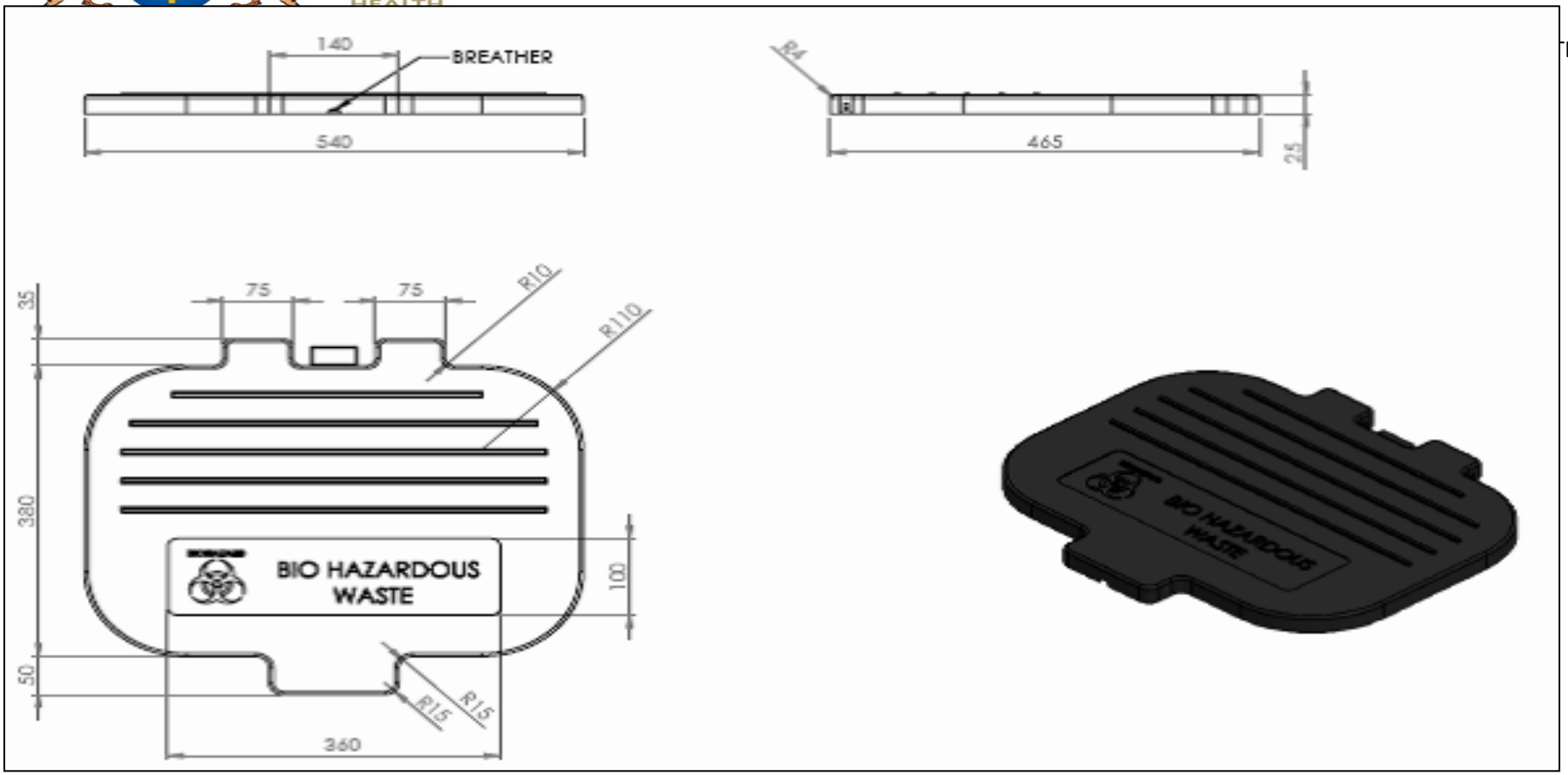

Figure 7: Lids for free standing rack
NOTE: *Patent rights must be negotiated out of contract with the respective patent holder.*
(Drawings not to scale)

GAUTENG PROVINCE
HEALTH
REPUBLIC OF SOUTH AFRICA

GT/GDH/050/2026 APPOINTMENT OF SERVICE PROVIDERS TO RENDER CCOMPREHENSIVE HEALTHCARE RISK WASTE MANAGEMENT SERVICES FOR THE GAUTENG DEPARTMENT OF HEALTH INSTITUTIONS FOR A PERIOD OF 36 MONTHS

Figure 8: Plastic brackets

(A)

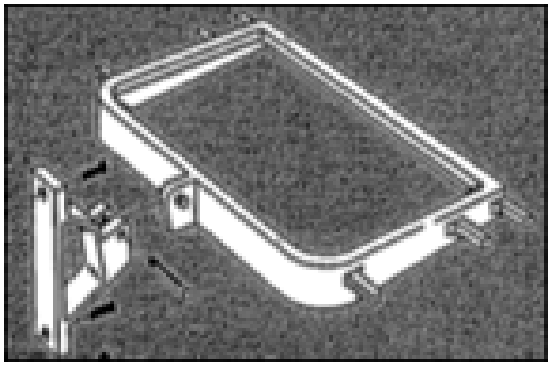

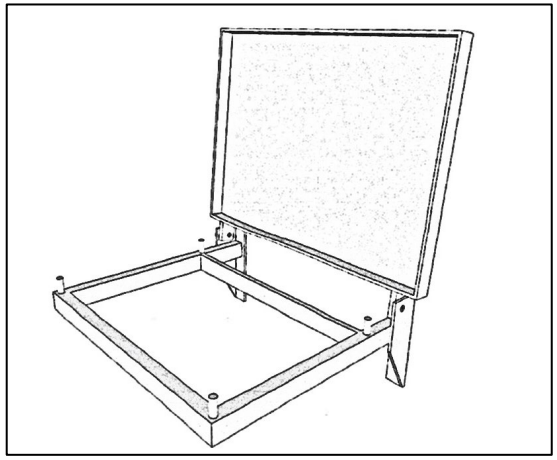

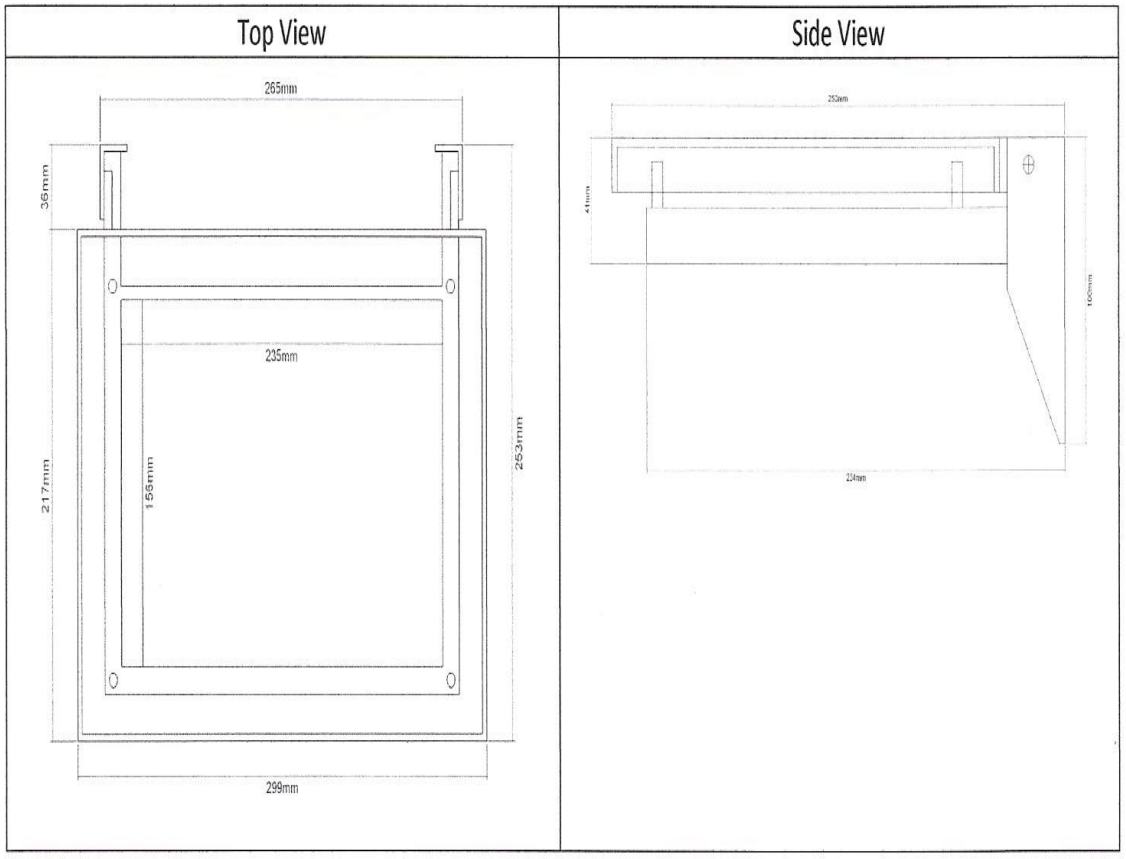

(B)

NOTE: *Patent rights must be negotiated out of contract with the respective patent holder.*
(Drawings not to scale)

Figure 9: Kick-a-bout (10, 20 litre and a red liner)

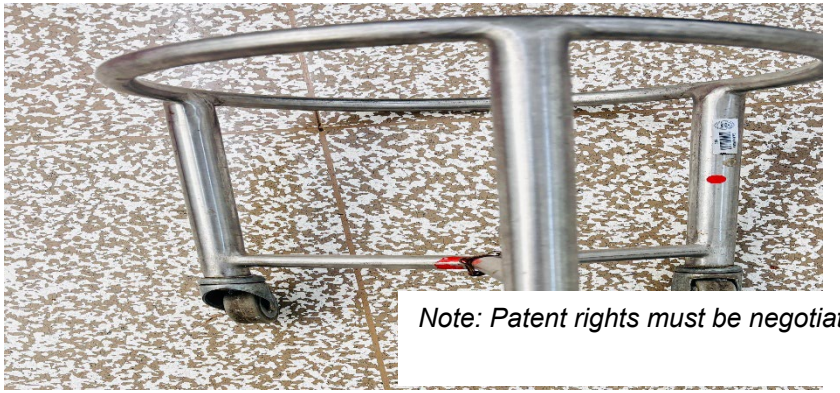

Note: Patent rights must be negotiated out of contract with the respective patent holder.
(Drawings not to scale)

NOTE: *Patent rights must be negotiated out of contract with the respective patent holder.*
An additional round bracket can be provided.
(Drawings not to scale)

Figure 10: Internal HCRW transport trolleys, A-C.

HCRW transportation trolleys shall be provided per written request from HCFs and the design should be communicated and agreed with the HCFs management

GAUTENG PROVINCE
HEALTH
REPUBLIC OF SOUTH AFRICA

GT/GDH/050/2026 APPOINTMENT OF SERVICE PROVIDERS TO RENDER CCOMPREHENSIVE HEALTHCARE RISK WASTE MANAGEMENT SERVICES FOR THE GAUTENG DEPARTMENT OF HEALTH INSTITUTIONS FOR A PERIOD OF 36 MONTHS


A



B


C

C

NOTE: Please note that illustrations are possible examples or a guide. *Alternatives to these designs can be considered, but design and prototype should be submitted to the DR within the mobilization period. Patent rights must be negotiated out of contract with the respective*

4.3.2. General installation and Manufacturing Requirements for Durable Items

Details on the mounting heights will be confirmed after consultation with the facility.

The service provider shall be responsible to ensure that all wall surfaces are such to ensure for proper fitment and where areas are affected by redrilling or refitment the area should be matched to the surrounding wall. Where matching paint is not available, the complete wall section is to be repainted as part of the installation.

a. Nursing trolley sharps brackets must have a support platform at the bottom as indicated in Figure 2
b. All wall brackets should be fitted with a clear sealant such as water and chemical resistant silicone.
c. Rawl bolts (anchoring bolts)to be used for fitment of brackets to brick and concrete walls of the size 6 -10 mm according to weight imposed on the durable. Must be rust resistant, preferably galvanised.
d. All durable items shall be easy to clean with no exposed areas being unreachable during normal cleaning operations;
e. All durable items must be strong and robust and have a service life of at least 3-years under normal working conditions.
f. All durable items that are not fully functional during the contract period shall be replaced by the service provider at any time during the contract period without any additional compensation to the service provider.
g. The service provider shall submit all samples of durable items within 3 months after the commencement date of the contract for approval by the DR.
h. Risk assessment to be done before installation of durable items

4.3.3. Testing Requirements for the Plastic Brackets

The following tests should be conducted as a minimum requirement at an accredited laboratory and test reports should be provided to the DR with the provision of the durables:

a. 5 kg drop test @500mm, 3 off
b. 5 kg drop test @1000mm, 3 off
c. 5 kg drop test @1500mm, 3 off
d. Bend test to destruction, 3 off
e. Bend test over time to a maximum of 48 hours using a 5 kg mass, two measurements a day, four measurements in total, 3 off
f. Polymer identification by FTIR, 1 off
g. Restriction of Hazardous Substances compliance, 1 off – analysis of heavy metals (Pb, As, Hg, Cr Cr6+).
h. Where equipment is produced from 3CR12 certification should be provided with each batch produced.



GAUTENG PROVINCE
HEALTH
REPUBLIC OF SOUTH AFRICA

NOTE: *It is the responsibility of the service provider to use water and electrical wire detectors to detect any water pipes or electrical wires in walls. If in any case a water or electrical pipe is damaged, the Service provider will bear the cost. Walls must be restored to its original structure*

4.4. Signage at Central Storage Area

The service provider shall, supply and install signage on request at HCRW central storage area. The signage shall be permanently fixed outside the central storage area , in such a manner that the signage will not be obstructed.

a. The signage shall be the size equivalent to an A1 poster;
b. The signage shall be UV protected and weather resistant;
c. Galvanised (steel base) and a metal type sheet shall be used
d. No plastic or alternative boards will be accepted.
e. The background colour shall be white;
f. The bio-hazardous sign shall be in accordance with the SANS 10248;
g. The following information must be included on the signage:
h. Health care waste storage area
i. No unauthorised entry
j. Keep locked at all time when not in use
k. Biohazard signage

4.4.1. Class

Space must be provided for the name of the HCWO, his/her telephone number and cell number which shall be clearly displayed;

a. The Gauteng Departmental Logo should be displayed on the signage.
b. The service provider shall not illustrate their company logo on the signage;
c. A draft layout of the signage is to be submitted to the DRfor approval before any signage is printed.
d. Any damaged signage should be replaced by the service provider

Figure 11: Picture for central storage area signage



4.5. FREEZERS

Signage of a bio-hazardous symbol shall be provided to HCFs for fitment to the front/top of freezers in accordance to the signage requirements set in SANS 10248. The size of the freezer to be provided is small (300L), medium (570L) and large (579L).

300L, 570L and 579L Freezer minimum specifications:

- It must be lockable
- Must have temperature control
- Must be white



Figure 12: Chest freezer exemplar

4.6. Type and Supply of Disposable Containers

The service provider should, as part of its obligations, throughout the services period, supply and distribute disposable containers for each of the HCFs, upon the service provider receiving a written request /order from the HCF specifying types and quantities. Under no circumstances may used disposable containers be recycled.

4.6.1. Distribution and Transport of Disposable Containers

a. The service provider shall deliver all disposable containers ordered by the HCFs within 48 hours of receipt of a written order (except where disposables are ordered for emergency situations such as formidable disease outbreaks, then a special delivery should be done according to departmental SOPs). Failure to do so constitutes a service failure.
b. Clean disposable containers may only be delivered during the HCRW collection round if:
   i. The collection vehicle's clean and dirty area is separately apportioned with a permanent fixture;
   ii. A separate dedicated vehicle or trailer should be used for the transport of clean disposable containers;
   iii. Vehicle and trailers should be disinfected after every delivery.
   iv. Where clean containers are delivered and the generated waste are collected simultaneously or where more than one HCF is serviced on the same route day, the service provider shall ensure that cross contamination is prevented.



GAUTENG PROVINCE
HEALTH
REPUBLIC OF SOUTH AFRICA

4.6.2. Disposable Container Delivery Point

The service provider shall manage all deliveries to take place between 8h00 and 16h00 and agree on locations to which disposable containers shall be delivered. The service provider will remain responsible for ensuring that clean disposable containers are not contaminated or damaged during the transport and delivery thereof.

4.6.3. General Requirements for Disposable Containers

a. Due to the different rates at which HCRW are generated as well as the particular requirements of disposable containers, different sizes of disposable containers have been identified for use at HCFs. HCFs shall determine the type of disposable container that would best meet their particular needs. The following design requirements unless otherwise required or mentioned in the appropriate SANS codes shall be complied with.
b. All containers shall be rigid, puncture resistant, leak resistant, and clearly marked.
c. If tested in accordance with SANS 452:2008, the labels or markings on the outer container shall remain distinct, easily legible, and free from smudges and without significant colour changes
d. The labels shall remain affixed to the container
e. All containers shall preferably be stackable to allow for effective storage and transport of full containers.
f. The lid and opening closure of all containers shall be designed such that they cannot be released after sealing
g. All containers shall be designed to avoid overfilling and protruding of HCRW through a “fill line” marking
h. All containers shall be bar-coded so that they can be tracked
i. The design of all containers shall be tested by an accredited testing facility for compliance with SANS 10229-1 and the requirements of SANS 452. Written proof of compliance shall be submitted to the DR together with 10 samples of each type of container tested as part of the bid evaluation
j. All containers shall pass a drop test in accordance with Section 4.10 of SANS 452: 2008. The service provider shall confirm the outcome of the tests by submitting a report to the DR on the said drop test carried out by an accredited institution
k. Ink colours and dyes of containers must be free of heavy metals
l. All labels on the disposable containers shall be clearly visible when stacked with other packaging
m. The sizes of hazard labelling shall be as specified in Annexure F of SANS 10248: 2008
n. All containers shall be labelled at least in English.

4.6.4. Sharps Containers

Table 3: Sharps Containers Specifications

CONTAINER SPECIFICATIONS	SHARPS CONTAINER	SHARPS CONTAINER	SHARPS CONTAINER	SHARPS CONTAINER	SHARPS CONTAINER	SHARPS CONTAINER	DISPOSABLE TALL SLIM SHARPS CONTAINER	DISPOSABLE TALL SLIM SHARPS CONTAINER
Container Category (litre)	1.5L square	2.5L round	5L round/ rectangular	7.6L round/ rectangular	10L round/ rectangular	20L round/ rectangular	900 mm	700mm
Handle required.	Yes	Yes	Yes	Yes	Yes	Yes	Yes	Yes
Lid Required	Yes							
Lid Colour	Yellow/Transparent							
Printing Colour.	Red							
Marking requirements	” Danger - Contaminated “Sharps” SANS 452:2008, The code ‘UN 3291 ERG 158-6.2”							
Manufacturing material	High-density polypropylene or polyethylene							
Wall thickness	Recommended minimum thickness of 1.8mm							



GAUTENG PROVINCE
HEALTH
REPUBLIC OF SOUTH AFRICA

4.6.5. Specican Containers

Table 4: Summary of Specican Container Specifications

CONTAINER REQUIREMENTS	SPECICAN	SPECICAN	SPECICAN	SPECICAN
Capacity (litre)	2.5L round	5L round	10L round	20L round
Handle required	Yes			
Container colour	Red			
Printing Colour	Contrasting white or black			
Marking requirements	“Danger – Bio-hazardous Waste for Destruction"			
Manufacturing material	High-density polyethylene being able to withstand temperatures as low as –15 °C for cold storage of pathological HCRW			
Wall thickness	Recommended minimum thickness of 1.8mm			

4.6.6. Pharmaceutical and Chemical Containers

Table 5: Pharmaceutical and Chemical Container Specifications

CONTAINER REQUIREMENTS	PHARMACEUTICAL AND CHEMICAL	PHARMACEUTICAL AND CHEMICAL	PHARMACEUTICAL AND CHEMICAL	CHEMICAL
Capacity (litre)	5L round	10L round	20L round	25L polycan
Handle required.	Yes	Yes	Yes	Yes
Lid required	Yes (flat round lid)	Yes (Flat round)	Yes (flat round lid)	Yes (screw cap)
Container colour.	Dark Green	Dark Green	Dark Green	Clear/
Printing colour.	Black	Black	Black	Black
Marking requirements for pharmaceutical containers	International hazard label for toxic substances "Pharmaceutical Waste – Schedules 1 - 4” or “Pharmaceutical Waste – Schedules 5 & 6”			
Marking requirements for chemical containers	International hazard label for toxic substances "Chemical Waste”			
Manufacturing material	High-density polyethylene or polypropylene.			
Wall thickness	Minimum thickness of 1.8mm			



GAUTENG PROVINCE
HEALTH
REPUBLIC OF SOUTH AFRICA

4.6.7. Liners

a. General design requirements
   i. All liner sizes must be able to fit their respective containers including disposables, reusables and durables.
   ii. The sizes and dimensions provided in the table below are only a guide for minimum requirements.
   iii. All liners should be provided with stickers.
   iv. All liners must be provided with cable ties or biohazardous tape.

Table 6: Red liner Specifications and Application

Red Liner Specifications	Capacity (litre)	Dimension	Liner micron thickness (µm)	Marking requirements
Placenta liner	2.5L	210mm x 390mm	40	International bio-hazard sign
Kick-about trolley liner	15L	560mm x 660mm	60	
Pedal Bin (stainless steel and plastic) 1 liner / kick-about trolley/ biohazard cardboard box liner	30L	560mm x 660mm	60	
Plastic bracket liner with handles	30L	500mm x 800mm	60	
Wall and nursing trolley baskets	40L	-	60	
Stackable container liner / biohazard cardboard box liner	50L	700mm x 750mm	60	
Stainless steel Pedal Bin 2 liner	60L	650mm x 750mm	60	
Free standing rack/ plastic pedal bin 2 liner	90L	760mm x 910mm	80	
Stackable container	125L	850mm x 300mm x 950mm	80	
Pedal bin (stainless steel and plastic) 3 liner	125L	850mm x 300mm x 950mm	80	
Bio-hazard cardboard box liner	140L	940mm x 1050mm	80	
Wheelie bin liner	240L	750mm x 950mm	80	
Mattress liner	650L	1200mm x 2200mm	80	

4.6.8. Bio-Hazard Cardboard Box

Table 7: Summary of Bio-Hazard Cardboard Box Specifications

CONTAINER TYPE.	**BIO-HAZARD CARDBOARD BOX**	**BIO-HAZARD CARDBOARD BOX**	**BIO-HAZARD CARDBOARD BOX**
Capacity (litre)	25L	50L	140L
Material allowed for bio-hazard cardboard box and lid	Double walled cardboard with an inlay or flute in the middle		
Lid requirements	The wording “Infectious” should be displayed on all 4 folding sides of the lid “Bio-hazardous” sign “Bio-hazardous waste for destruction”		
Liner required	Yes		
Bio-hazard cardboard box colour.	White outer body and brown inside		
Printing Colour.	Red		
Marking requirements	The word “Infectious” The bio-hazard sign on at least 2 sides of the box “Bio-hazardous Waste for Destruction"		

4.6.9. Bio-hazard Tape Specification

A broad 50-mm white polyethylene tape provided with glue on the one side. The bio-hazard sign shall be in red ink and printed in a range between 50 mm and 150 mm from the previous sign. The tape shall be provided in lengths of at least 5m. Usage can be calculated as 1 roll per 10 disposable bio-hazard cardboard boxes. Good quality tape should be provided to avoid over-sealing of the bio-hazard cardboard boxes. Tape that has a poor adhesive factor will not be accepted. The tape shall be provided for sealing of bio-hazard cardboard boxes and bubble wraps for fluorescent tubes at no additional cost to the department. Should facilities wish to order tapes separately then the cost will be incurred according to the price schedule. Should any of these specifications not be adhered to, it will be deemed a service failure.

4.6.10. Spill Kit Content

45L and 90L spill kits should be provided by the contractor on request and as per the need of the facility. Items as specified below should be replaced by the service provider when depleted or expired.

Table 8: Items of Spill Kit

Item Description
Durable Polyvinyl Chloride (PVC) Carrier Bag
Tubes 30ℓ Coco Peat Absorbent (±30ℓ) (absorbent materials, sans)
1.2m Universal Absorbent Booms (2.4m in total)
Universal Absorbent Mats
5kg Chemical Absorbent Powder (±30L Absorption)
50gm Absorbent Granules
Spark Resistant Dustpan & Brush
Pair of Heavy-Duty PVC Gloves
Pair of Safety Goggles
FFP3 respirator Mask/ N95 mask
Heavy Duty Recovery Bags
500ml Disinfectant Spray
Disinfectant Wipes
Disposable Apron
1 x Antiseptic Alcohol Pad
1 x Disposable Wipe
1 x Disposable Scoop & Scrape
1 x Disposable Medical Bag
1x Cable tie/ biohazard tape
Dust mask (previous tender)
Gas mask
Face shield
Itinerary Check List
Spill Instruction Guide

Note: *Bidders will be required to provide/present samples for evaluation by the BEC*.

4.7. Type and Supply of Reusable Containers

Reusable containers must be provided as per generation rate and need of the respective HCF to ensure an effective and efficient service delivery. At no time may the delay of delivery impact negatively on the collection and containerization service rendered within this contract. One sample of each type of reusable container must be submitted to the DR for verification of features and quality standards as part of the bid evaluation. Please note that additional containers may be requested, if a suspected deviation from the initial submitted sample is detected during the service period. Reusable containers and cable ties as a unit shall be provided free of charge. The service provider shall, as part of its obligations and throughout the contract period, supply all reusable containers to be used for the collection and transport of HCRW from the HCFs to the treatment plant.

4.7.1. Managing supply of Reusable Containers

The HCFs shall always (in collaboration with the service provider) ensure that there is sufficient supply of reusable containers. It is the HCFs responsibility with the service provider to estimate and monitor each HCFs need for reusable containers. Should a HCF experience a shortage in the supply of reusable containers, the service provider will be notified and if the service provider fails to abate the shortage within 48 hours from the time of notice, it will constitute a service failure.

The service provider shall deliver reusable containers to a storage area nominated by the respective HCFs. Decontaminated reusable containers may only be delivered during the HCRW collection round if the collection vehicles' clean and dirty area is separately partitioned with a permanent fixture. A separate dedicated vehicle or trailer should be used for the transport of clean reusable containers and should be protected from natural elements, vectors and disinfected after every delivery. Where clean containers are delivered and the generated waste is collected simultaneously or where more than one HCF is serviced on the same route day, the service provider shall ensure that cross contamination is prevented. The service provider must ensure that they provide double the quantities of reusable containers requested by the facility. The first half will be at the wards/units whilst the other half will be at the clean storage area. Once the half in the wards/units is ¾ full and taken to the dirty area then the clean ones should be delivered to the wards/units by the facility. Then the service provider will collect the ¾ full once at the storage area and deliver the half amount of the initial quantity requested to the clean area within 24hours of collection of the dirty containers

4.7.2. Maintenance of Reusable Containers

a. All reusable containers should be inspected upon delivery as well as during collection by HCFs for any physical damage.
b. Damaged containers should not be accepted by HCFs.
c. Lost or damaged reusable containers should be replaced by the service provider and an estimated replacement cost should be provided in the pricing schedule.
d. The unique barcode/tracking number used for reusable containers taken out of service may not be used for replacement of reusable containers.
e. Ownership of reusable containers by service providers i.e wheelie bins and stackable containers
f. The service provider shall maintain ownership of all reusable containers throughout the service period.

4.7.3. Specifications for Reusable Containers

a. Reusable containers shall be rigid, puncture resistant and leak resistant. Lids shall fit tightly onto the body to prevent / minimise the release of odours;
b. Reusable containers body shall be slightly narrowed towards the bottom to allow for easy release of its contents when tipped;
c. All bar codes used for the identification of reusable containers shall be attached by means of a suitable epoxy or similar method that will prevent the accumulation of dirt behind the barcode
d. The colour coding for reusable containers should be in accordance with SANS 10248: Part 1: 2008;
   i. Infectious HCRW: Body – Red, Lid - Red;

ii. Pharmaceutical and chemical HCRW: Body- Dark Green, Lid – Dark Green
iii. Sharps HCRW: Body-Yellow, Lid yellow.

e. Suitable and sufficient cable ties are to be provided with each batch of clean and decontaminated wheelie bins and tall slim sharps containers delivered to the respective HCFs for sealing of full containers, forming part of the wheelie bin and tall slim sharps containers system;
f. Cable ties with a width of not less than 3mm shall be used as a closing mechanism for all wheelie bins and tall slim sharps containers;
g. Cable ties for infectious waste wheelie bins should be red and for pharmaceutical waste dark green and for tall slim sharps containers yellow in colour and;
h. All reusable containers are to be manufactured in compliance with SANS 10248:2008 and SANS 1494: 2014.
i. Lids shall be affixed to wheelie bins, tall slims sharps containers and pedal bins bodies by means of hinged shafts;
j. The lid of tall slim sharps container shall have protrusions/ protruding lip affixed on the lid and on the container with holes to allow for the fitting of cable ties
k. Stainless steel pedal bin must be red coated, the surface should be smooth with no cutting splinters
l. Verification certificate of 3CR12 for stainless steel pedal bins be delivered with the sample
m. Pedal opening mechanism must be robust and easy to use
n. Stainless steel pedal bins must have a soft opening and closing mechanism to avoid noise
o. Pedal bins must have a black biohazardous symbol or non-removable sticker or embossed as stipulated in SANS 10248:2008. All pedal bins must be maintained throughout the tender timeframe and must be of an industrial quality. If stickers are used, they should be replaced where necessary
p. No household pedal bins will be considered.
q. All reusable containers must be marked with the size of the bin.
r. 240 litres Wheelie bins shall be equipped with own full width handle for handling and manoeuvring;
s. Lifting of wheelie bins will only be undertaken by means of hydraulic bin lifting equipment
t. All wheelie bins shall be equipped with a galvanised steel hinged hasp and staple system with space for a cable tie on the front of the lid;
u. Reusable stackable containers and pedal bins shall be designed so that upper layers of stacked containers are restrained from sliding over;
v. Reusable stackable containers and pedal bins shall be of rectangular or square shape
w. Stackable containers, pedal bins and reusable tall slim sharps containers shall be equipped with handles or some approved means of carrying e.g., hand recesses, protrusions or flanges for handling and manoeuvring. Lifting of these containers will be undertaken manually and allowance is to be made for that
x. Reusable containers must have a bag retention mechanism that should allow easy changing of liners except for tall slim sharps containers.
y. Pedal bins must have a hinged lid which encourages the lid being opened by means of depressing foot pedal and not hands.
z. Reusable tall slim sharps containers must have a base at the bottom to support the container when standing and to avoid the container to easily fall
aa. Copies of independent accredited laboratory certification of containers will be required.

NB: *Wheelie bins, pedal bins, reusable tall sharps and stackable containers can be considered in any health care facility depending on the facilities size and type of services rendered. The choice of the particular system most appropriate for any HCF will remain with the management of that facility in consultation with the HCFs team and district AD: EH to ensure uniformity in the decisions that are taken on the type of system to be implemented.*

Depending on the assessment of the HCF a decision can be made on the type of the reusable containers suitable for that facility.

The service provider should also collect HCRW contained in reusable containers purchased by facilities from previous service providers, disinfect and return the containers to the facilities. It is the facilities responsibility to make sure that the previously purchased reusable containers are branded with the facility's names before being handed over to service providers for collection, disposal of waste and disinfection.

4.7.4. Categories and ranges of reusable containers

Table 9: Reusable container sizes

WHEELIE BINS, STACKABLE CONTAINERS, PEDAL BINS AND REUSABLE TALL SLIM SHARPS CONTAINERS
240 litre wheelie bin (red and or dark green)
90 litres reusable stackable container (red and/ dark green)
45 litres reusable stackable container (red and/ dark green)
25L plastic pedal bin
25L stainless steel pedal bin
50L stainless steel pedal bin
60L plastic pedal bins
90L stainless steel pedal
90L plastic pedal bin
1500mm reusable tall slim sharps container

4.7.5. Manufacturing of Reusable Containers

Table 10: Manufacturing requirements and material to be used in reusable containers

Container body	One-piece Injection moulding
Container lid	One-piece injection moulding
Wheel hubs (Wheelie bins)	Injection moulding
Hinge pins:	Injection moulding
Body, lid and hinge pins	High-density polyethylene material- Ultraviolet stabilised
Wheels (Wheelie Bins)	First grade compressed solid rubber
Wheel hubs (Wheelie Bins)	High-density polyethylene (HDPE) material- Ultraviolet stabilised
Axle (Wheelie Bin)	Solid steel

Colourant	The colourant shall be colourfast to prevent the plastic material colour from altering in normal use

NOTE: *No moulded parts are to show any foreign substances, shrink holes, cracks or blowholes. There should also not be any obvious colour streak*

4.7.6. Reusable Container Markings

a. The label on the reusable containers shall be clearly legible;
b. The marking shall contain the manufacturers name, trade name or trademark. The month and year of manufacture to be included on the marking;
c. Reusable containers shall include warning signage, the international hazards label according to SANS 10248-3:2011 and relevant UN codes. The following text shall be provided in clear legible letters for the various HCRW categories: Infectious HCRW: "Infectious Health Care Risk Waste for Destruction", pharmaceutical and chemical HCRW: "Pharmaceutical and Chemical HCRW for Destruction "; Sharps HCRW: "Contaminated sharps for destruction".
d. Wording on the label shall be in white to contrast with the background colour, be of one size, style and layout that will result in the markings that is clearly legible;
e. The background of the label shall be of the colour that contrasts with the surface area immediately surrounding the label;
f. All text shall as a minimum be in the English language;
g. All containers shall be provided with a 24-hour toll-free emergency number. Marking of reusable containers shall be done in such a way that is not easily removable.

Note: *Supply of a reusable container that does not comply with these requirements shall constitute a service failure and the service provider will be penalized as per table of penalties*.

4.7.7. Reusable containers pictures

Figure 13: Stainless steel pedal bins (25L, 50L and 90L)



Figure 14: Plastic pedal bins (25L, 60L and 90L)



Figure 15: Wheelie Bins (Red and Green)



Figure 16: Stackable containers (should be red for infectious waste and green for pharmaceutical waste)



Figure 17: Reusable tall slim sharps container



4.7.8. Stickers

Sufficient removable stickers should be provided with each batch of clean and decontaminated reusable containers and liners delivered to the respective HCFs for labelling purposes.

4.7.9. Decontamination of Reusable Containers

a. The service provider shall ensure that reusable containers are cleaned, decontaminated, and dried before delivery at any HCF. Where a reusable container delivered by the service provider is found to be visibly dirty, the HCF has the right to refuse acceptance of the container(s), upon which the service provider should replace the dirty reusable container(s) with a clean and decontaminated container.

b. The Department has the right to take periodic swab tests of reusable containers delivered to the HCF to validate the efficacy of the decontamination process. Should these tests reveal that a reasonable level of decontamination has not taken place, the department may request the service provider (at their own expense) to do additional swab tests on subsequent deliveries and to submit the report to the Department to prove the efficacy of the decontamination. Failure to do this will constitute a service failure. An automated bin washer that can handle all categories of reusable containers is recommended.
c. The procedure for cleaning and decontamination of the reusable containers should align with the requirements of the National Environmental Management: Waste Act, 2008 (Act No. 59 of 2008) and Schedule 2 of the Gauteng HCWM Regulations, 2004. The service provider is required to submit the procedure used for decontamination and cleaning. The details must include, but are not limited to the following:
   i. The cleaning method
   ii. The disinfecting reagents used
   iii. The drying process
   iv. Storage of decontaminated containers
   v. Frequency and method used for regular inspections and
   vi. Monthly swab test protocols

d. As a minimum requirement, the swab tests must include the following microorganisms:
   i. Escherichia coli
   ii. Staphylococcus aureus
   iii. Pseudomonas aeruginosa
   iv. Streptococcus (enterococcus faecalis)
   v. Fungi: Aspergillus
   vi. Coliforms
e. It will ultimately remain the service provider's responsibility to ensure that the requirements for deactivation of microorganisms is achieved: total coliform count less than 100 colony forming units (cfu); and Staphylococcus aureus and Escherichia coli should be undetectable. The following is required according to the Gauteng HCW Regulation, 2004, Schedule 2:
f. Testing must be undertaken by an independent competent person, randomly once per month (Quarterly based on compliance). If non-compliant, the testing methodology of decontamination shall be revised by the service provider and presented to the DR.
g. Swab testing must be undertaken on the reusable containers cleaned within an hour, based on a monthly average (per container type);
h. Swab testing must be undertaken on at least three trucks used to transport the waste;
i. A minimum of 1 swab sample per container type after decontamination; and
j. Swab samples must be sent to an independent laboratory for analysis.
k. The service provider is ultimately responsible to prevent recontamination of containers after decontamination during the handling and transportation of the reusable containers. The department reserves the right to select reusable containers delivered to the HCFs to conduct random swab tests to evaluate the efficacy of the decontamination process. The DR can request additional random swab testing to be done based on internal quality and IPC measures. Written proof of decontamination should be submitted to the department as part of the service providers monthly report.

Note: *Bidders will be required to provide/present samples for evaluation by the BEC*.

4.8. Tracking System for Containers

a. The service provider shall provide an appropriate bar code tracking system to ensure that at any time during the contract period records exist of all disposable and reusable containers in the care of any particular HCF and the treatment plant.
b. The service provider shall ensure that the department can log into their system and retrieve all data from the commencement to the end of the contract for verification purposes. The department reserves the right to review the conditions as and when required.
c. Each disposable and reusable container shall have a unique barcode/tracking number. The barcode/tracking number shall be placed visibly on the exterior of the container. The barcode/tracking number shall be durable, resistant to any wear and tear, particularly from washing and decontamination, throughout the service period.
d. The Department reserves the right to review the current tracking system technology. Tracking system of the containers should be assessed as part of the site evaluation.

4.9. Collection, Storage and Weighing of Generated HCRW

The HCF is responsible for the segregation, containerisation, collection, and transportation of the HCRW from the wards and units to the central storage area.

The service provider shall ensure:

a. That HCRW contained is secured, bar coded and locked in transit, between the collection point and the treatment plant.
b. That all proposed and or planned collection schedule deviations must be provided to the DR for approval and only after such approval may the schedule changes be implemented. The DR shall communicate these changes with the HCFs before effecting changes in the collection schedule and should be confirmed in writing through an email or written letter (service provider's letterhead) directed to the DR and HCRWF.
c. That HCRW is collected from the HCFs in accordance with the collection schedule.
d. That the DR as well as the respective HCFs is provided with the latest version of the collection schedule.
e. That HCRW collection rounds shall be between 8:00 and 16:00 on agreed days of the week. HCRW collection outside of the hours must be communicated in writing to the affected facility immediately.
f. All disposable and reusable containers delivery manifest document shall be triplicate carbonised copies, where the first copy shall be submitted to the HCWO, or its representative, at the time of collection and delivery. This record should always be legible.
g. That all the representatives have a form of identification e.g name tag, name badge upon entry into the facilities

4.9.1. Collections

4.8.1.1. HCRW collection points

a. The HCRW collection point is the designated area (central storage area) at each HCF where collection of HCRW should commence. The service provider shall as part of the mobilization period and thereafter, in cooperation with each HCF, establish the location of the HCRW collection point(s). HCFs may assign more than one HCRW collection point at each respective facility.

b. The service provider may enter the HCFs for collection services where pharmaceuticals are stored at the pharmacy; pathological waste is stored at the mortuary and in freezers in the respective maternity wards, demarcated waiting area at isolation wards and cytotoxic waste at the Oncology units and or any other specialized service collection request by the HCFs. The service provider shall make arrangements for HCRW collection personnel to gain access to such HCRW collection points, make arrangements for the installation and securing of scales (where applicable) and agree on the mass recording verification process to be followed during each collection round.
c. The HCRW shall become the service provider's responsibility once the manifest document forming part of the manifest system has been completed, all HCRW was weighed and the manifest signed by the appointed EHP, HCWO or designated person (appointed by the CEO) for HCRW management at the HCRW collection point. Where any difficulties in terms of access to the proposed HCRW collection points may have been identified, such problems are to be reported immediately to the DR in writing and form part of the monthly report. The service provider shall be responsible for removing any HCRW spillage at the HCRW collection point that may have been caused by the service provider and ensure that the area effected by the spillage is decontaminated. Failure to immediately remove spillage from the HCRW collection point shall constitute a service failure.

4.9.2. Collection arrangements

4.9.2.1. Pathological HCRW

For hospitals, pathological HCRW will in general be stored at the mortuary's refrigerator or cooling units or freezers which can be ordered from the service provider. Collection should be done at these identified areas. HCRW generated in clinics and or CHCs will be stored in freezers ordered from the service provider. Ownership of freezers from hospitals, clinics/CHCs will form part of the department's property.

4.9.2.2. Isolation HCRW

Special arrangements should be made concerning appropriate personal protective equipment for all employees exposed to isolation HCRW. The service provider shall ensure that all their employees are provided with the appropriate personal protective equipment as guided by the provisions of the OHS ACT 85 of 1993 and in particular the regulations for Hazardous Biological Agents and on further advice and approval by the HCF management of the department. Since isolation HCRW has been assigned a different UN number for the packaging and transport requirements, special arrangements must be made in advance by the HCFs HCRW officer with the service provider for collection, bar-code tracking, transport, treatment, and final disposal of isolation HCRW. Isolation HCRW must be managed in accordance to departmental SOPs and guidelines which are aligned to legislation mentioned above.

4.9.2.3. Chemical Waste

a. All chemical waste must be contained in accordance to SANS 10248 (2): 2008. Where chemicals cannot be contained due to size or special handling requirements for the sake of safe transport, it will be bubble wrapped or contained in bio-hazard cardboard boxes designed for that specific purpose (these boxes and bubble wrap must be provided free of charge) e.g. fluorescent tubes and UVGI lamps. Where chemical HCRW is found to be containerised in its original packaging it should not be decanted and presented as such for collection by the service provider.
b. Once any HCF notified the service provider of the collection requirements for chemical waste at that HCF, the service provider shall:
c. Arrange for the collection of these items in consultation with the HCF's HCRW Officer within 3 working days.
d. Collect items for transport, treatment, and disposal thereof in accordance with these contract specifications.

4.9.2.4. Frequency of HCRW collection

In addition to the requirement that maximum HCRW storage times are not to be exceeded, the service provider shall observe the following minimum frequencies for HCRW collection at HCFs

Table 11: Collection frequencies

TYPE OF HCF	COLLECTION FREQUENCY
Central and Tertiary Hospitals	Daily Collection, including weekends and public holidays from 08h00 - 16h00, except otherwise agreed with the DR in writing.
Regional and District Hospitals	Daily Collection from 08h00 – 16h00, except otherwise agreed with the DR in writing. Excluding weekends.
Community Health Centres	Depending on volumes, at least once per week.
Clinics	As determined by the maximum HCRW storage times, but not less than once a month.
EMS, FPS, NGO, Training colleges and laundries, Travel clinic and wellness centres and medical depots	As determined by the maximum HCRW storage times, but not less than once a month.

NOTE: *All HCRW stored at any HCF is to be cleared on the day of collection and where waste is more than the truck capacity the truck must return the following day to complete collection at the respective HCF. Collection of isolation waste should be done according to the departmental guidelines and SOPs.*

4.9.3. Weighing and Scale Requirements

The service provider shall provide a suitable scale (together with a SANS certified calibrated weight) for weighing of HCRW. If the service provider fails to weigh the waste at the time of collection, it will constitute a service failure and invoices reflecting quantities where the collection was not weight, will be rejected for payment processing.

4.9.3.1. Hospitals Requirements

a. The service provider shall provide and maintain a permanent load cell scale with a steel ramp that can weigh all categories of HCW containers. The scale shall be installed at the main HCRW collection point. The scale shall be approved for commercial use and shall annually be calibrated by an independent and accredited party.
b. The SANS certified calibration weight shall be provided by the service provider for verification of accuracy before any HCRW is weighed. Should the condition of any of the scales not be suitable for further use, the service provider shall be required to replace such scales. Although permanent single-phase power supplies will be provided for scales used at the Hospitals, such scales are to be equipped with internal backup power supply to ensure its effective operation during power failures.
c. Ownership, maintenance and or servicing of all scales provided at hospitals will remain with the service provider.

4.9.3.2. Clinics, CHCs, FPS, EMS, NGOs, Colleges, Laundries, clinic and wellness centres and medical depots Requirements

The service providers shall provide a mobile load cell scale for weighing of the HCRW. The scale shall be capable of weighing at least one reusable container at a time. The scale shall be approved for commercial use and shall be calibrated by an independent and accredited party annually. A SANS certified calibration weight shall be available for verification of accuracy before any HCRW is weighed. All mobile scales shall be equipped with rechargeable power supplies, with appropriate backup to ensure uninterrupted use. Should the condition of any of the scales not be suitable for further use, the service provider shall be required to replace such scales at their own cost within 24 hours.

4.9.3.3. Calibration of Scales

The service provider shall provide copies of all calibration certificates to be submitted to the DR on an annual basis. The HCRW Officer shall have the right to verify calibration of the scales. If this verification indicates an error, or the deviation is more than what is allowed by the independent and accredited calibration authority, the department shall be entitled to demand calibration of the scale by an independent and accredited party as required by the necessary consents and statutory requirements. In this case the respective service providers will be responsible for payment. The service provider shall in the interim in such cases supply a replacement scale.

4.9.4. Recording of HCRW collected

The service provider shall as part of the service delivery implement a recording system that will form part of a manifest system as well as the basis of payment for services rendered. For each consignment of HCRW collected, the service provider shall issue a manifest document containing information on:

4.9.4.1. Barcode/tracking number of containers collected;

a. Type (volume), gross weight, weight of the reusable container and net weight of the waste;
b. Type (volume), number and total mass of disposable containers for each HCRW category not placed inside the reusable containers;
c. HCRW categories;
d. Time and date of collection;
e. HCRW vehicle registration number;
f. Driver details;

g. Details of HCF representative witnessing HCRW collection.
h. The manifest document shall be in three-fold at the time and place of the HCRW collection, with each copy signed by the HCWO or his/her nominated representative and the service provider. One signed copy of the manifest document shall be retained by the HCWO before the service provider leaves the HCF.
i. The service provider shall record the collection, treatment and/or disposal of all HCRW categories after which a destruction certificate/manifest document shall be issued to confirm appropriate treatment and/or disposal of the HCRW. The aforesaid certificate stamped with the official stamp of the authorized treatment plant shall be submitted to the HCWO at the respective HCF before the end of the calendar month. The format will be provided by the DR during the contract briefing or the respective mobilization meetings.

4.10. Transportation

The service provider shall transport all HCRW from the HCRW collection points at the HCFs to the treatment plant in accordance with the requirements of the Road Traffic Act,1996 (Act No. 93 of 1996) and the National Road Traffic Amendment Act, 2008 (Act No. 64 of 2008), GHCRW regulations, 2004, and any other required specification from e.g., municipal bylaws as applicable for the transportation of dangerous goods.

4.10.1. Requirements for transportation

a. The service provider shall always observe the required health and safety measures and shall avoid spillage of HCRW. In the event of spillage occurring during transportation, it shall immediately be removed by the service provider and reported to the relevant authorities as well as the DR when applicable. Failure to remove any spillage immediately constitutes a service failure. All spillages should be managed in accordance with the Departmental SOPs and the provisions and requirements of municipal bylaws and disaster management protocols and practices as well as the context of requirements mentioned above. For this purpose, service providers will only be responsible for spillages during collection, transport, and treatment of HCRW. In-house spillages are excluded from the service provider’s responsibilities.
b. All HCRW vehicles shall comply with the relevant standards laid down by the National Road Traffic Act, 1996 (Act No. 93 of 1996) Government gazette No. 1892, compliance with the respective municipal by laws for transportation of hazardous waste transporters and the GHCWM regulations, 2004, as well as any necessary consent.
c. Lifting tailgates are to be used for the loading and offloading of wheeled reusable containers from HCRW vehicles. There shall be a suitable method for fastening the closed reusable containers (wheeled as well as stackable containers), thus reducing the risk of spills during sudden movement of the HCRW.
d. All HCRW vehicles shall be equipped with emergency equipment required by the necessary consents. This equipment shall as a minimum include spill kits containing all personal protective equipment with fire extinguishers. The staff shall be familiar with the emergency procedures whilst also trained in the effective use of such emergency equipment.

4.11. Treatment of the HCRW

a. The service provider shall treat HCRW from all HCFs. The service provider shall ensure that the treatment plant records each disposable and reusable container when it arrives at the treatment plant. The recording shall contain information on the barcode/tracking number of the disposable and reusable container and time of arrival. An official stamp confirming the treatment of HCRW by the specific treatment plant on the day of treatment must verify destruction certificates/manifest documents. These verification documents must be provided to all HCFs a month after the collection date. Access to the treatment plant shall be granted to the DR for monitoring of movement of containers delivered to and collected from HCFs.
b. The service provider shall during a planned or unplanned outage secure the use of cold storage facilities suitable for the storage of HCRW until the outage is over. Alternatively, backup treatment capacity at another treatment plant can be secured.
c. The service provider or any sub-contracted treatment plant may not use HCFs as storage space during outages experienced. Collections should continue as stipulated in the submitted collection schedule as if no outage is experienced.
d. Written notice of all planned and unplanned outages should be provided to the DR 48 hours in advance of planned outages and within 24 hours of the occurrence of an unplanned outage. Failure to maintain collection during outages will constitute a service failure as listed in the table for penalties. The department reserves the right to pilot alternative treatment technologies in HCFs.

4.12. Disposal of Residues

The service provider shall be responsible for the safe and environmentally sound disposal of all residues from the treatment of HCRW as per permit/statutory requirements. Treated HCRW must be classified according to the minimum requirements for the handling, classification and disposal of hazardous waste and residues must be finally disposed of or land filled according to the GHCWM regulations, 2004.

4.13. Specifications For Consultancy Support And On-Site Training

a. The bidder shall at all times correspond with the Departmental Representative, CEO and the training coordinator.
b. All training schedules shall be submitted to the Departmental Representative on a monthly basis.
c. Where training sessions of which ever kind is cancelled within 24 hours of training the Contractor may claim the intended training hours for that specific training session.
d. Where notice of cancellation was given 48 hours in advance of any scheduled training, the Contractor may not claim any training hours and should reschedule the training programme in consultation with the Departmental Representative, CEO and training coordinator within 48 hours. Interruptions in training conducted should be kept to the minimum.
e. The bidder will not be renumerated for transport from or to the HCFs.

4.13.1. Consultancy Support

a. The Contractor shall provide a compulsory consultancy support service to all HCFs during the contract period which shall address the placement and installation of equipment and containers and subsequently utilization.
b. The consultancy support shall specifically address technical issues related to the HCW management system and the service will include short information sessions on the use of the different containers provided by the Contractor. These information sessions shall include the correct placement and use of the equipment. These sessions shall be conducted in close collaboration with the HCW coordinators, Environmental Health Practitioners, HCWO's, General Workers, Senior Managers, Infection prevention and control and OHS Committees.
c. It is essential that the person designated to provide the consultancy support, be familiar with the OHSA and regulations, Infection prevention and control principles and the cradle to grave management of all HCW streams.

4.13.2. The consultancy services shall include but are not limited to:

a. Providing guidance in acquiring appropriate disposable containers and liners;
b. Advising HCFs on HCW management matters;
c. Through a consultative process, ensure that HCRW management systems implemented reflect the standards laid down in the Gauteng Code of Practice for Health Care Waste Management, the Gauteng Health Care Waste Management Regulations as well as other appropriate statutory requirements;
d. Giving advice on the modifications or upgrading of HCRW collection points for each HCF;
e. Advise on specifications for associated equipment to be acquired by HCFs, such as personal protective equipment (PPE);
f. Ensure that all new HCRW management equipment is appropriately positioned and correctly used;
g. The service provider shall also provide this service during the rollout of durable items as part of the dual system at HCFs (including replacement of lost, stolen, or broken brackets).
h. Ensure that all HCFs receive a colour printed catalogue of all products provided by the Contractor;
i. The consultancy support will be continuous for the period of the contract and will not be renumerated as a separate item in the schedule of rates and quantities.

4.13.3. On-Site Training

a. Continued on-site HWSETA accredited training as part of the integrated HCW management service shall be provided by the service provider.
b. The service provider shall only provide HWSETA accredited training programmes and these programmes should additionally be endorsed by the HPCSA for CPD points as guided by the Departmental Representative and such shall be submitted for approval by no later than 3 (three) months after the official commencement date of the contract.
c. The Department shall respond to the training programmes within 20 (twenty) working days of receipt. If the service provider has not received a response within 20 working days of submitting the training programmes, the service provider shall prompt the Department's Representative in writing for a response. The training programme shall be deemed approved by the Department if no response is received within 10 (ten) working days of the service provider having prompted the Department's Representative for a response.
d. The training programme shall contain but is not limited to the following:

i. Methodology for the training;
ii. Programme for the training sessions;
iii. Examples of all training materials to be used by the Contractor which should include but are not limited to samples of equipment;
iv. Pre- and post-evaluation forms;
v. Attendance verification.

e. The service provider will be required to consult with the Department's Representative to arrange an information session for guidance and assistance on the training materials and training methods to be applied.
f. Training programmes will be coordinated from the facilities. Service provider will communicate with facilities and draft the training schedule. The facilities must approve the final training schedule. Service provider should communicate the final approved schedule to central office. The training programme shall be conducted on-site at HCFs to minimize trainee transport costs.
g. Appropriate audit findings should be addressed through the formal training programs in consultation with the Departmental Representative. Spill management training shall be provided during onsite training sessions by the service provider.

4.13.4. Scope of the training programme

For the duration of this contract on-site training will be required and will consist of the following requirements:

4.13.5. Training Sessions Required (*refer to annexure A price schedule*)

a. Training schedules and proof of training conducted which include data of head counts and training hours conducted, must be updated and forwarded to the Departmental Representative on a monthly basis. It is expected of the contracted party to analyse the training data and present a monthly and annual report to the Departmental Representative.
b. The number of persons to be trained would depend on the size of the HCF. The training must include at least but not limited to the scope as mentioned above.
c. The service provider shall provide a certificate of attendance to each official completing the respective training session.
d. It is recommended that a training session should comprise on average 20 officials or as otherwise arranged with the respective CEOs.

4.13.6. Background of Trainer

a. The facilitator/trainer shall have a background in occupational health and safety, environmental health or Infection prevention and control. They may also have a nursing or medical background. Consultants shall further be familiar with working in HCFs and should preferably have public sector experience.
b. At least 3 years' experience in the field of HCW, Infection prevention and control, Nursing, Environmental health, Occupational Health & safety and or Quality Assurance.
c. Strong on-site training experience;
d. Training background in community development / health promotion / environmental health /Infection prevention and control , occupational health & safety and or Quality Assurance;
e. A good understanding of the HCF environment;
f. Ability to work in English or any of the other 11 official South African languages.
g. The CV's of the proposed trainers shall be included in the response to the tender.

h. The service provider shall only introduce new trainers to undertake the training programme, after written approval of such trainer has been granted by the Department's Representative.

4.13.7. Qualifications for Trainers

The available capacity of the service provider and the proposed trainers is essential in the award of this contract. The service provider shall demonstrate the following:

4.13.8. Experience in the design of training programmes;

a. Experience in the design and production of training materials;
b. Capacity to ensure ongoing monitoring and regular reporting to the Department;
c. Experience of performance evaluation.

4.13.9. Target groups for training

a. All employees generating health care waste within the health care facility.
b. The training programme shall address existing gaps identified in knowledge, skills and attitude and responsibility. Collectively these will contribute to the behaviour required for sustainable HCW management. The following priority areas are therefore to be addressed by the training programme.

4.14. Training Content

The following knowledge gaps shall be addressed by the Service Provider:

a. Waste legislative framework;
b. Responsibilities and duties;
c. Waste management plans;
d. Equipment plans;
e. Contingency plan;
f. Procuring of containers;
g. The role of the HCF HCW team & HCWO;
h. The hazards associated with HCRW;
i. The different categories of HCRW;
j. Correct segregation of HCW;
k. Cradle to grave management of HCRW;
l. The types of containers and liners for the collection and storage of HCW;
m. Offsite treatment / disposal of HCRW;
n. The correct use of personal protective equipment;
o. The importance of reporting on internal performance monitoring and external auditing;
p. Occupational Health and Safety in terms of HCWM;
q. Spill management;
r. Hospitals acquired infections in relation to HCWM;
s. HCW transport and treatment methods.

4.14.1. Skills teaching

Demonstration is an important component of introducing any HCW Management system.

Examples of skills required include:

a. Use of new equipment;
b. Capping, closing and sealing of disposable containers;
c. Lifting techniques;
d. Weighing of HCRW in reusable containers;
e. Spill standard operating procedure;
f. Hand washing techniques;
g. Correct use of PPE;
h. Waste minimization.

4.14.2. Training materials

a. The service provider shall support the training using appropriate visual aids during training to reinforce the main teaching information. The training materials shall be picture based and in more than one language as appropriate. Technical language is however to be avoided. Although the training materials shall predominantly consist of printed materials, audiovisual materials may be accepted if well motivated.
b. All training materials shall display the GDoH logo. A complete set of all training materials (Including posters and pamphlets) should be provided to all attendees at cost to the service providers (in colour).
c. The training material shall consist of the following but not limited to:
d. HCWM posters shall be provided by the service provider as per the facility's required quantity;
e. Training manual;
f. At least two (2) Pamphlets (e.g. General HCW management principles, pamphlet with grey areas);
g. Appropriate stationary (pen and mini notepad).
h. English will be the language used for all training materials as well as for the presentation of training sessions. English plus two other official South African languages (to be agreed upon) will be the languages of choice for the development of posters for display at HCFs. These posters (A3 or A4) shall be user friendly to patients/public.

4.14.3. Awareness activities and other support materials

The service provider shall include awareness activities as part of the training programme. Awareness activities shall be used to highlight the importance of HCW management, to reinforce key messages and to provide incentives.

An inter-ward provincial competition could for instance be an effective tool to promote improved segregation. One provincial awareness event per year. The awareness event will be conducted in close cooperation and consultation with the district HCW forum. Details of such an event shall be provided to the Departmental Representative for consideration. A maximum of 6 hours can be claimed for a specific event hosted by the service provider. If the event is half a day only 6 hours shall be claimed.

4.15. Training Evaluation

a. The Department (through the central office, HCWC and/or HCWO will evaluate the effectiveness of training. The service provider shall cooperate with any evaluator, external or internal, that the Department may appoint to undertake the required evaluation. The service provider shall make any training programmes and training materials available, as may be required by the evaluator. The Contractor shall further allow for the evaluator or any other persons nominated by the Department, to participate in the training sessions.
b. As part of the evaluation process, the service provider shall also compile an evaluation sheet that must be completed by all participants in the various training sessions.
c. For the purpose of evaluation and monitoring, the service provider shall submit a report for each type of HCF. The report shall be submitted to the Department's Representative, together with the relevant invoice for the training sessions.
d. The report shall as a minimum contain the following:
   i. Time sheets and attendance list for all training sessions;
   ii. Evaluation sheets from all training sessions;
   iii. Programme for the training sessions with details of venues, dates and participants;
   iv. Any deviations from the training programme, with reasons for the deviation;
   v. Lessons learnt and recommendations for amendments to the training programme during future training sessions.

4.16. Commencement Of New Service Provider And Mobilisation

a. New service providers should maintain and ensure continuous services from the initiation of the contract. All collection services should be phased in with close cooperation of the previous service provider as per handover period. Following the award of contract, the service provider shall use the mobilisation period of a maximum of 3 months from contract date to mobilise its staff, as well as acquire the necessary equipment and supplies. The mobilisation period shall further be used by the service provider to establish communication lines with each of the HCFs as well as with the district offices and the head office of the Department. The DR to provide a project plan to the service providers on commencement of the contract. The project plan will include the following information:
b. Lists with names and contact details of all HCWO and procurement officers for the respective HCFs in that district;
c. Most recently updated collection plan;
d. Inventories of types, sizes and numbers of disposables and reusable containers deployed in each HCF;
e. Statistics on average monthly consumption / turnover for each of the different disposable containers and reusable containers supplied to the respective HCFs. The service providers to adhere to the activities and timelines on the project plan. The Department should ensure a smooth transition between incoming and outgoing service providers.

4.17. Rollout

The rollout to the reusable system shall be done in close cooperation with the respective CEO's, districts and facility managers and the internal HCW team. The rollout will only commence after the assessment of the HCFs and completion of an equipment plan (format will be provided during the mobilization meeting) by the respective CEO, facility managers and the DR. All durable items should be ordered as per departmental procedure.

4.18. Communications

The service provider will be required to have regular communication and feedback with the Department through pre-determined meetings and by providing various reports and other information as requested. The Department will provide the service provider with templates for all the required reports.

4.18.1. Meetings

The service providers shall attend all meetings and be represented by a person suitably qualified and authorised to make commitments and enter into agreements on behalf of the service provider. Failure by the service provider to be appropriately represented at project meetings constitutes a service failure in accordance to the table of penalties

Table 12: Reporting and meetings

MEETING	FREQUENCY	REQUIREMENT
Operational Meeting	When required	Present and discuss monthly reports and address complaints
Provincial HCRWF	Quarterly	Present quarterly reports
District HCRWF	Monthly/ Bimonthly	Present report, and address complaints etc.

Should either party require any meetings in addition to the operational meeting, these meetings shall be convened by giving, unless otherwise agreed, at least 1 weeks' prior written notice to the other party.

4.18.2. Reports

The following reports are required to be compiled and submitted to the Department at regular intervals but are not limited to the listed reports and additional reports may be requested within the contract timeframe.

Table 13: Reports and responsibilities of service providers

REPORT/ DOCUMENTS	RESPONSIBILITY	FREQUENCY	SUBMIT TO	SUBMISSION TYPE
Monthly Progress Reports	Service provider	Monthly	DR	Electronic and hard copies
Rollout Plans	Service provider	1 month prior to Rollout in any HCF in accordance with the Rollout Plan.	CEO and DR	Electronic
Equipment Plans	Service provider + HCRW Coordinators + HCRW Officers	After completing the equipment plan assessment P	CEO and DR	Signed hard copies
Copies of invoices and manifest documents	Service provider	7th calendar day of the month (Monthly).	Finance Department at HCFs for goods received voucher (GRV)	Electronic and original hardcopies. Each respective HCF must also receive a copy to GRV.
Age analysis	Service provider	Monthly	DR and Finance accounting.	Electronic

4.18.3. Monthly Progress Report

The monthly progress report(s) shall be submitted electronically, on USB and one hardcopy must be submitted before the 7th of the following month. This report shall cover one calendar month, starting on the 1st day of the month under consideration.

4.18.4. Monthly progress reports shall inter alia include

Statistical report - A record in the format provided of the mass of each category of HCRW collected from the various HCFs during the previous month (The gross and net mass and the reusable container mass deducted should be reflected). The format will be provided during the mobilization meeting and service providers are required to only use the format provided by the DR.

a. Type of treatment and safe/final disposal used for HCRW collected from each HCF;
b. A financial review in the format provided to present service costs for each HCF serviced to Finance Accounting;
c. Advice on problems encountered specifically related to the HCRW management standards maintained at each HCF, effectiveness of HCRW management systems and quality of HCRW management equipment provided;
d. A summary of incident and accident reports submitted during the previous month, as well as the measures taken to rectify the situation and to prevent a reoccurrence of such incidents and accidents;

e. Summary of the monthly swab tests conducted to validate the efficacy of the decontamination process;
f. Details of any planned/unplanned outages experienced and of any planned outages expected
g. Any relevant health and safety matters e.g. needle stick injuries or accidents;
h. Any relevant environmental matters.
i. During a rollout of durables items at HCFs the monthly progress reports will contain the following additional information (including replacement of lost, stolen or broken brackets):
   i. Updates or revisions on any specific HCF rollout plan including details on the equipment plans;
   ii. Progress on implementation of the rollout plan, providing details on the status of rollout at each HCF, including:
   iii. A record of the durable items installed and maintained for each of the HCFs
   iv. A record of the disposable containers delivered with information on the type and quantity for each HCF;
   v. A record of reusable containers delivered with information on the type and quantity for each HCF;
   vi. Anticipated remaining time required for completion of the rollout programme for each HCF.

4.18.5. Incident / Accident Reports

The service provider shall provide incident / accident reports to the DR. Such reports are typically to be generated in the event of any emergency leading to accumulation of HCRW at any HCF / transfer station / treatment plant or events that affect the obligations of the service provider or the Department under this contract. Incident / accident reports shall also address environmental issues as well as health and safety related incidents. Incident / accident reports are to be used for immediate and detailed reporting on any incidents / accidents that may impact on the health and safety of people, as well as environmental situations creating a risk of pollution.

Incident / accident reports shall be forwarded in electronic format to the DR by no later than noon the following day, with hard copies formally submitted within 7 days thereafter. Within the following two weeks, the incidents reported must be investigated in cooperation with the HCWO and remedial action taken to prevent future occurrence thereof is to be recorded with the information circulated to the affected parties. Where the service provider fails to submit reports, it will constitute a service failure.

4.19. Contingency Plan

At inception of the contract the service provider is required as part of the backup arrangements to provide copies of contractual agreements with minimum of three (3) backup treatment plant(s) to be used for the destruction of the HCRW for the duration of the contract with appropriate back up storage in cases of outages. Should the nominated treatment plants at any time during the contract become a non-viable option for whatever reason, the service provider is required to inform the Department in writing within 12 hours and is also required to immediately nominate an alternative fully compliant HCRW Treatment Plant as its backup facility and provide copies of such revised agreements. Failure to do this will be considered a service failure. All proposed backup plants must be registered with Gauteng Department of Agriculture and Rural Development (GDARD), Gauteng Department of Environment (GDEnv) and DFFE and approved by the DR prior to commencement of activities.

4.19.1. Planned and Unplanned Outages at Treatment Plants

a. Without prejudice to any other obligation or liability of the service provider under this contract, if at any time during the services period the service provider is prevented from processing HCRW at the treatment plant due to the occurrence of planned or unplanned outages, then the service provider shall invoke the backup arrangements during the period from the date of commencement of the planned or unplanned outage until the date and time of cessation of such planned or unplanned outage.
b. The backup arrangements should provide for storage of HCRW in a manner that avoids odour problems as well as health and safety hazards in accordance with the necessary consents, by:
c. Ensuring that all generated HCRW can be stored at the treatment plant until the cessation of the planned or unplanned outage, or by;
d. Procuring the use of an alternative treatment plant until the cessation of the planned or unplanned outage.
e. An outage with a duration exceeding 48 hours without suitable contingency plans in place will be considered a service failure. During the unplanned and planned outages, the service provider must within 48 hours notify and complete required application at DFFE, GDEnv and GDARD for land filling of HCRW if alternative treatment plants are not available.
f. In cases where the service provider cannot continue services as stipulated in this specification, the Departments may outsource the service within 24 hours after the last collection service was rendered by the originally appointed service provider. Preference shall be given to other contracted parties already contracted to the Department to render the full service as specified in this specification. If current contracted service providers cannot meet this request the Department may enter a 3-quotation process to ensure the continuation of service as specified in this specification.
g. The contracted service provider will be responsible for any additional payment required to outsource services in this case. Bio-hazard cardboard boxes should be provided for infectious waste and disposables provided for sharps, pathological, isolation and pharmaceutical waste as a backup arrangement during national/provincial outages/strikes in the HCRW treatment industry to HCFs for containerisation of generated HCRW until the outages have ended. Failure to provide this service will be considered a service failure.

4.19.2. Breakage of HCRW collection vehicles

a. The service provider shall further prevent a backlog in the supply and delivery of reusable and disposable containers, as well as prevent a build-up of HCRW at any of the HCFs, due to unforeseen breakage of HCRW collection vehicles, by:
b. Ensuring access to and securing the use of additional HCRW collection vehicles that follow these specifications;
c. Utilizing commercial rented trucks only if they are permitted or dedicated for the transport of HCRW and to ensure compliance for transportation permits and;
d. Providing a night collection service in cases where additional vehicles are not available. This should however be well communicated and approved by the DR and the HCFs.
e. Labour unrest or strikes shall not be considered a valid reason for any shortage in the delivery of containers, or any build-up of HCRW due to non-collection at the HCFs. If any unforeseen delays occur, it must be communicated by telephone and verified in writing to the DR within 8 hours from identification of such delays. The use of commercial vehicles not authorised for HCRW services will be considered a service failure.

4.20. Health And Safety

The service provider is required to abide by the requirements of the Occupational Health and Safety Act, 1993 (Act No. 85 of 1993). All HCWOs / EHPs should facilitate the signing of Section 37(2) agreement between service providers and the facility as per the OHS Act.

4.20.1. Bidder to demonstrate knowledge and understanding of Health and Safety policy by submitting Health and Safety file with the following:

a. Appointment letters for Health & Safety Representatives (at least 1)
b. Appointment letter of a first aider
c. Appointment letter of fire marshal
d. Letter of Good standing
e. Proof of Induction trainings on Hazardous Biological Agents and Hazardous Chemical Agents Regulations
f. Previous Risk assessment reports (at least1)
g. 1 minutes of recent Health & Safety committee meeting
h. Personal Protective Equipment (PPE) policy
i. Appointment letter of safety officer
j. Proof of training for Health & Safety.
k. Proof of routine / periodic medical surveillance for all staff.
l. Copy of registration with Department of Employment and Labour for COIDA.

4.20.2. The bidder must demonstrate adequate working facilities at their premises as follows:

a. Hand wash facilities
b. Hand Drying facilities
c. Running water (both hot and cold)
d. Pest control system available (bidder to avail proof of SLA / Contract)
e. Liquid Hand Soap
f. Ablution facilities with pictogram (signage)
g. Change rooms- at the supplier premises
    i. Lockers
    ii. Showers
    iii. Hand wash facilities
    iv. Drying facilities

4.20.3. Bidder to demonstrate knowledge and understanding of Health and Safety policy by presenting the existence of staff PPE.

a. Heavy Duty Gloves .
b. Overalls/ coverall.
c. Safety Shoes.
d. Goggles or Visors.
e. N95 respirator.
f. FFP3.
g. Hard hat.
h. First Aid kit with contents.
i. No First Aid kit with contents.

4.21. Structure Of The Contract

The contract comprises of the mixed model structure. That is itemised and fixed model.

4.21.1. Fixed Model

The fixed model services consist of:

a. Collection
b. Transportation
c. Treatment
d. Final disposal
e. Provision of a functional electronic tracking system
f. Training
g. Clean-up of illegal dumping of HCRW generated by the HCFs
h. Clean-up of waste classified as healthcare risk waste from any fire incident/natural disasters
i. Clean-up of waste during upliftment of HCRW services
j. Provision of disposable items
k. Provision of reusable containers
l. The department reserves the right to negotiate the price per kg before awarding the tender

4.21.2. Itemised Model

Itemised model services consist of:

a. Provision of durable items
b. Pedal bins
c. Red liners

4.22. Payment For Services And Supplies

The monthly payment system is based on the detailed schedule of rates and actual quantities. The service provider shall receive payment for all services outlined in this specification. The service provider will be paid when original invoices are submitted, captured and all information is found to be correct on the invoices. Invoices shall be submitted timeously by the service provider to the Department. These invoices must contain PO numbers. Monthly statements shall be submitted in excel and PDF formats to the Reconciliation team, Directorate: Finance Accounting of the Department. Supply chain management procedures in terms of fixed and itemised should be followed and copies of all invoices should be provided to the HCF and Central Office: HCWM for data capturing and verification purposes.

The following applies to all service providers:

a. The contract consists of a fixed price per item schedule;
b. In consideration of the service provider providing the services in accordance with the terms of this contract, the Department shall, throughout the services period, pay the service provider.
c. HCRW treatment and safe disposal certificates forms part of the manifest system and are related to the services rendered in any month. These shall be attached to that month’s invoice.
d. Invoicing shall be presented in accordance with the items listed in the pricing schedule and will be submitted on a monthly basis reflecting actual services rendered for the month.

e. Should the provincial HCRW management budget be centralised, service providers will be expected to submit a single invoice with appropriate attachments for payment processing.

4.23. Collection Done In Reusable Containers

The total mass of HCRW collected, transported, treated and disposed of multiplied by the unit cost per kg for the respective HCRW categories as indicated in the pricing schedule for all reusable containers respectively;

4.23.1. Minus

a. The mass of the empty individual reusable containers (This must also be illustrated on the manifest document);

4.23.2. Plus

a. The total mass of HCRW collected in disposable containers (not placed inside reusable containers), transported, treated and disposed of, multiplied by the “Unit cost per kg for HCRW” for the respective HCRW categories as.

4.23.3. Minus

a. The sum of all penalty’s deductible for the relevant month.

NOTE: No additional cost will be paid for the decontamination, cleaning, drying and transporting of reusable containers.

4.23.4. Remuneration for repairs to damaged scales

Where damage to scales were caused by proven abuse or negligence by HCF staff, the service provider will be entitled to make a written submission to the CEO of the HCF and the DR and shall be copied and notified of the outcome.

When a dispute is declared the following procedure shall be followed by both parties:

a) Full details on the matter should be stated in a written affidavit. Reports of witnesses should also be presented if applicable;
b) In cases of an extreme emergency, it must be communicated telephonically and confirmed in writing;
c) The service provider shall attach three market related quotations to have the damaged equipment repaired. The respondents must be registered vendors with Government;
d) Once an investigation has been done by the HCF the outcome shall be communicated to the service provider in writing;
e) Dependent on the outcome, approval for repairs to be done will be authorised by the respective CEO in accordance with provisions of the Public Financial Management Act, 1999 (Act No. 1 of 1999) and;
f) The service provider will be entitled to submit an invoice for such repairs (if successful with the dispute process) at cost to the HCF (if the HCF was negligent) and in accordance with the lowest quotation received.

During the converse when the service provider is proven to be guilty of negligence the service provider will be responsible for fixing and or replacement of the scale. Notwithstanding the above, the service provider shall provide a temporary replacement until the damaged scale has been repaired and returned to the HCF.

4.24. Penalties

The department has the right to evaluate the service provider's performance continuously. Penalties will apply to any contravention of the service provider's services in terms of the provisions of this contract specification and will be defined as a service failure. Poor performance will be investigated, and agreement should be reached in terms of remedial actions to be taken with the service provider. SCM will monitor the service provider and if services are not remediated to satisfactory of the end user, the DR and SCM may administer a penalty request. The service provider has the right to oppose the penalty award and must respond within 14 days after receipt of the notice to award a penalty. If no response is received the penalty will be awarded on the next month following the end of that quarter. All correspondence must be completed in writing. For all service failures outlined in this specification, penalties to the service provider will be awarded as follows:

Table 14: Penalties

SERVICE FAILURE	PENALTY
The service provider is found guilty of illegally storing HCRW (irrespective of its source) in an enclosed storage area not licensed for the storage of HCRW.	To be determined as per DFFE regulations
The service provider is found guilty of illegally disposing of HCRW, irrespective of its source. In addition to any penalty posed by GDARD/GDEnv/DFFE	To be determined as per DFFE regulations.

All service failures will be imposed in terms of the relevant legislative framework and any applicable bylaws. Penalty amount (VAT excluded).

4.25. Specification For Provision Of A Reusable System For All HCFs

4.25.1. Rollout at all HCFs

The service provider's obligations during rollout at all HCFs shall comprise of, but not limited to the following:

a. Submit the rollout plan to the DR for approval within 6 months of commencement date of the contract and ensure that rollout is completed within 18 months of the contract period;
b. Communicate with the HCFs including management of the facility and district AD: EH to keep them informed of plans, programmes and progress throughout the rollout period;
c. Review jointly with the HCFs including district AD: EH the HCW equipment plans for each HCF and to determine and agree on the quantities and types of durable items, as well as reusable containers required (including replacement of lost, stolen or broken brackets). To be provided at the mobilization period;
d. Ensure approval of each equipment plan is given by management of the facility and the DR prior to installation;
e. Supply and install durable items as per approved equipment plans;
f. Determine the number of reusable containers required to be in circulation for each of the HCFs;
g. Communicate with the HCFs regarding HCRW collection and delivery times (disposable and reusable).

4.25.2. Rollout Period

The service provider assumes responsibility for the rollout of durable Items after completion of the mobilisation period. A dual system will be in place during the rollout, where reusable and disposable containers shall be used (in parallel) in some HCFs whilst the new HCRW management system is rolled out. Failure to achieve full implementation and finalisation by the stipulated rollout completion period shall constitute a service failure and the service provider will be penalized as per table of penalties. The HCRW management system shall be deemed to be fully implemented when all durable items are installed and used in combination with the required disposables, with all infectious HCRW collected and transported in reusable containers.

4.25.3. Dual system operation during the Rollout Period

While phasing in the HCRW reusable system, the service provider shall be responsible for collecting, transporting, treating, and disposing of all HCRW generated at the respective HCFs.
The dual system to be operated during the rollout period will therefore require for durable and disposable containers provided by the previous service provider to be used (in parallel) in some HCFs, whilst the HCW reusable system is rolled out and maintained in other HCFs. On commencement of the rollout, the previous service provider will have been paid for supply of disposables and the new service provider should optimally utilise this stock.

The duration of the implementation period shall be minimised for each HCF and shall not exceed:

a. For Central/Academics Hospitals: 8 weeks
b. For Tertiary and other hospitals: 6 weeks
c. For CHC, MOU and Clinics: 4 weeks
d. For FPS, EMS, Dentals, MMCs NGOs, MSD, NGO, Travel Clinics and Wellness Centers and Laundries: 1 week

4.25.4. Reporting during the rollout

During the rollout period, the service provider shall be required to submit monthly progress reports that shall comprise of, but not limited to the following:

a. Updates or revisions on any specific HCF rollout plan including details on the equipment plans;
b. Progress on implementation of the rollout plan, providing details on the status of rollout at each HCF, including:
   i. A record of the durable Items installed and maintained for each of the HCFs;
   ii. A record of the disposable containers delivered with information on the type and quantity for each HCF
   iii. Anticipated remaining time required for completion of the rollout programme for each HCF.

5. ANNEXURE 1: MAIN LIST OF HEALTH CARE FACILITIES

6. ANNEXURE 2: THE EVALUATION METHODOLOGY AND SPECIAL CONDITIONS

GAUTENG PROVINCE
HEALTH
REPUBLIC OF SOUTH AFRICA

GT/GDH/050/2026 APPOINTMENT OF SERVICE PROVIDERS TO RENDER COMPREHENSIVE HEALTH CARE RISK WASTE MANAGEMENT SERVICES FOR THE GAUTENG DEPARTMENT OF HEALTH INSTITUTIONS FOR A PERIOD OF 36 MONTHS

ANNEXURE 1: MAIN LIST OF HEALTH CARE FACILITIES (not limited below list)

JOHANNESBURG DISTRICT		
1.	**NAME**	**ADDRESS**
2.	Employee Health and Wellness Clinic	45 Commissioner Street, Johannesburg (Ground Floor)
3.	Travel Clinic (Environmental Health)	45 Commissioner Street, Johannesburg (Ground Floor)
	NAME	**ADDRESS**
4.	Bheki Mlangeni Hospital	Corner Bolani Road and Koma Road, Soweto
5.	Charlotte Maxeke Academic Hospital	Jubilee Road, Parktown
6.	Chris Hani Baragwaneth Hospital	Old Potchefstroom Road Soweto 2012
7.	Edenvale General Hospital	Modderfontein Road, Edenvale
8.	Helen Joseph Hospital	Perth Road, Auckland Park
9.	Rahima Moosa Mother and Child Hospital	Fuel & Oudshoorn Street, Coronationville
10.	Sizwe Tropical Disease Hospital	Modderfontein Road, Modderfontein
11.	South Rand Hospital	32 Friars Hill road, The Hill
12.	Tara The H. Moross Centre	49 Saxon Rd. Hurlingham
13.	Wits Oral and Dental Hospital	Jubilee Road, Parktown, 2192
	NAME	**ADDRESS**
14.	Alexandra CHC	33 Arkwright Avenue, Wynberg, Johannesburg, Gauteng, 2090
15.	Barney Molokoane Clinic	Orange farm, Ext. 1
16.	Braamfisherville Clinic	Corner Loerieblaar and Mathogo Street, Braamfischerville
17.	Chiawelo Clinic	1743 Rihlamfu Street Chiawelo
18.	Diepkloof Clinic	7643 Zone 3, Diepkloof

GAUTENG PROVINCE
HEALTH
REPUBLIC OF SOUTH AFRICA

GT/GDH/050/2026 APPOINTMENT OF SERVICE PROVIDERS TO RENDER COMPREHENSIVE HEALTH CARE RISK WASTE MANAGEMENT SERVICES FOR THE GAUTENG DEPARTMENT OF HEALTH INSTITUTIONS FOR A PERIOD OF 36 MONTHS

19.	Diepsloot South Clinic	Stand 5355, Diepsloot Extension 7, Bryanston, Gauteng, 2189
20.	Discoverers CHC	Clarendon Drive, Roodepoort
21.	Eikenhof Clinic	Plot 45, Eikenhof
22.	Ennerdale, Ext 9 Clinic	5446 Street B/ Smith Walk, Ennerdale, 1830
23.	Eyethu Yarona Clinic	Plot 19 Malibongwe Drive, Lanseria
24.	Hillbrow CHC	Cnr. Smith & Klein Street, Hillbrow
25.	Imbalenhle Clinic	Drieziek Extension 9, Orange Farm, Gauteng, 1841
26.	Itereleng CHC (Cluster A)	No. 5/6 Roodepoort Road, Dobsonville
27.	Kliptown Clinic	Ascot Street, Eldorado Park, Ext.9
28.	Lenasia CHC South	3 Cosmos Road, Lenasia South
29.	Lenasia Clinic	Nirvana East Drive, Lenasia
30.	Lilian Ngoyi CHC	Old Pothchefstroom Road, Diepkloof
31.	Mandela – Sisulu	8299 Pela Street, Orlando West
32.	Meadowlands Clinic	2931 Zone 2, Meadowlands
33.	Michael Maponya Clinic	Noaya St, Pimville, Johannesburg, 1808
34.	Mofolo CHC	1450 Roodepoort Road, Mofolo Central
35.	Moroka Clinic (Cluster A)	3197 Malatji Street, Moroka
36.	Nizamiye Clinic	K101 Leroux Avenue, Midrand, Extension 3
37.	Noordgesig Clinic	No. 1 Main Road, Noordgesig
38.	Orange Farm Ext.7 Clinic	12481 Orange Farm, Ext.1
39.	Orlando Clinic	6517 Rathebe Street, Orlando East
40.	Sinethemba Clinic	811 Poortjie
41.	Stretford CHC	Orange Farm Ext. 4, Orange Farm
42.	Thembelihle Clinic	Volta Street, Lenasia, Ext. 10

GAUTENG PROVINCE
HEALTH
REPUBLIC OF SOUTH AFRICA

GT/GDH/050/2026 APPOINTMENT OF SERVICE PROVIDERS TO RENDER COMPREHENSIVE HEALTH CARE RISK WASTE MANAGEMENT SERVICES FOR THE GAUTENG DEPARTMENT OF HEALTH INSTITUTIONS FOR A PERIOD OF 36 MONTHS

43.	Tladi Clinic (Cluster A)	144 Babinaphuthis Street, Tladi
44.	Tshepisong Porta Cabin Clinic	3242 Corner Dalela and Bulawayo street phase 4
45.	Vlakfontein Clinic	Vlakfontein, 1821
46.	Wildebeesfontein Clinic	Plot 536, Wildebeesfontein, Orange Farm
47.	Zola CHC (Cluster A)	780783 Bendile Street, Zola
48.	Zola Gateway Clinic	Jabulani, Soweto, 1868
	NAME	**ADDRESS**
49.	Alexandra Dental	38 Arkwright Ave, 1st Street, Wynberg
50.	Chiawelo Dental	1818 Rihlamfu Street, Soweto
51.	Diepkloof Dental	7648 Zone3, Diepkloof
52.	Ennnerdale Dental	Cnr. 2nd Avenue & Ormson, Ennnerdale
53.	Hillbrow Dental	Cnr. Smith & Klein Street, Hillbrow
54.	JCDI Dental	81 von Brandis Street, Johannesburg
55.	Kliptown Dental	21 Asart Rd, Ext 8, Orlando
56.	Lenasia Dental	C/O Rose & Ninara Road, Lenasia
57.	Lillian Ngoyi Dental	Old Potchefstroom Rd., Diepkloof
58.	Meadowlands Dental	2931 Zone 2, Meadowlands
59.	Michael Maponya Dental	1479 Zone1, Pimville
60.	Mofolo Dental	1415 Roodepoort Rd, Mofolo Village
61.	Newlands Dental	C/O 9013 Str. & Long Rd, Newlands
62.	Orlando Dental	6516 Rathebe Str., Orlando
63.	Riverlea Dental	Colorado Drive, Riverlea
64.	South Rand Hospital Dental Clinic	Friarshill Street, The Hill
65.	T.M.I. Dental	Joubert Str. Ext., Parktown

GAUTENG PROVINCE
HEALTH
REPUBLIC OF SOUTH AFRICA

GT/GDH/050/2026 APPOINTMENT OF SERVICE PROVIDERS TO RENDER COMPREHENSIVE HEALTH CARE RISK WASTE MANAGEMENT SERVICES FOR THE GAUTENG DEPARTMENT OF HEALTH INSTITUTIONS FOR A PERIOD OF 36 MONTHS

66.	Tladi Dental	1592 Lagwale Str., Tladi
	NAME	**ADDRESS**
67.	Discoverers EMS	
68.	Edenvale EMS	
69.	Hillbrow CHC EMS	
70.	Imbalenhle EMS	
71.	Lenasia EMS	
72.	Mofolo CHC EMS	
	NAME	
73.	Diepkloof FPS	
74.	Johannesburg FPS	
75.	Roodepoort FPS	
	NAME	**ADDRESS**
76.	Auckland Park Medical Depot	43 The Serpentine St, Hurst Hill, Johannesburg, 2092

WEST RAND DISTRICT		
	NAME	**ADDRESS**
1.	Carletonville Hospital	Falcon St, Carletonville, 2499
2.	Dr. Yusuf Dadoo Hospital	C/O Memorial & Hospital Street, Krugersdorp
3.	Leratong Hospital	Adcock Street, Kagiso
4.	Sterkfontein Hospital	Sterkfontein Rd., Krugersdorp
	NAME	**ADDRESS**
5.	Azaadville Clinic	Community Centre, Cnr. Azaad & Tajmahal street, Azaadville

GAUTENG PROVINCE
HEALTH
REPUBLIC OF SOUTH AFRICA

GT/GDH/050/2026 APPOINTMENT OF SERVICE PROVIDERS TO RENDER COMPREHENSIVE HEALTH CARE RISK WASTE MANAGEMENT SERVICES FOR THE GAUTENG DEPARTMENT OF HEALTH INSTITUTIONS FOR A PERIOD OF 36 MONTHS

6.	Badirile Clinic	Portion 151, Farm Brandvlei, 261 IQ
7.	Bekkersdal East Clinic	12981 Kgomoyahlaba Street
8.	Bekkersdal West CHC	3545 Khomoyahlabon Avenue, Bekkersdal, Westonaria, 1779
9.	Bekkersdal West PHC	3545 Khomoyahlabon Avenue, Bekkersdal, Westonaria, 1779
10.	Blybank Clinic	666/40 Boxer street, Blybank, 2500
11.	Blyvoor Clinic	NO.15 19TH Avenue, Blyvooruitzicht
12.	Deelkraal Clinic	9 Deelkraal Drive, Deelkraal, 2499
13.	Dr. Martinez Ramirez Clinic	11901 Gopane Drive, Munsieville
14.	Elandsfontein Clinic	277 IQ, Elandsfontein, Portion 1-19
15.	Eric Ndeleni Clinic	898 Flamigo street, Lusaka
16.	Fanyana Nhlapo Clinic	C/O Kagiso Ave & Mmusong, street, Kagiso 2
17.	Fochville Clinic	428th Street, Fochville, 2515
18.	Glenharvie Satellite Clinic	Baines Kloof, Glenharvie
19.	Hands of Compassion Clinic	Plot 534, Portion 28, Nooitgedacht
20.	Itumeleng Clinic	C/O Magaliesburg & Brits Rd., Hekpoort
21.	Jan Maree Clinic	C/O Gould & Flemming Street, Krugersdorp West
22.	Khutsong East Clinic	2829 Tswana Section, Khutsong, 2500
23.	Khutsong Ext 3 Clinic	6168 Ext 3, Khutsong, 2500
24.	Khutsong Main CHC	5839 Extension 4, Khutsong South
25.	Khutsong Main MOU	5839 Extension 4, Khutsong South
26.	Khutsong South Clinic	Sompane Road, Khutsong, 2500
27.	Khutsong West Clinic	7176 Xhosa Section Khutsong, 2500
28.	Kocksoord Clinic	C/O Mark and Human Streets, Kocksoord
29.	Kokosi Clinic	183 Shiburie Road Kokosi, 2515

GAUTENG PROVINCE
HEALTH
REPUBLIC OF SOUTH AFRICA

GT/GDH/050/2026 APPOINTMENT OF SERVICE PROVIDERS TO RENDER COMPREHENSIVE HEALTH CARE RISK WASTE MANAGEMENT SERVICES FOR THE GAUTENG DEPARTMENT OF HEALTH INSTITUTIONS FOR A PERIOD OF 36 MONTHS

30.	Krugersdorp Central Clinic	C/O Church and Fountain
31.	Luipaardsvlei Clinic	C/O Lewis & Victor street, Luipaardsvlei
32.	M L Pessen Clinic	C/O Park and Sutherland Streets, Randfontein
33.	Maki Legwete Clinic	Kagiso Ext. 12, Kagiso
34.	Mogale Clinic	Koster Rd. (next to SAPS), Magaliesburg
35.	Mohlakeng CHC	3400 Kagiso Ave, Kagiso, Krugersdorp, 1754
36.	Mohlakeng PHC	3400 Kagiso Ave, Kagiso, Krugersdorp, 1754
37.	Muldersdrift Clinic	Plot 72, Swartkops Rd., Muldersdrift
38.	Noordheuwel Satellite Clinic	C/O Hoffnaar & Lud Hersch street, Noordheuwel
39.	Odirileng Maponya Clinic	C/O Kagiso Ave & Sebenzisa Drive, Kagiso 2
40.	P J Maree Clinic	Clinic Street, Toekomsrus
41.	Randgate Clinic	1032 Bailey Street, Randgate, 1759
42.	Rietvallei 2 & 3 Clinic	3791 Cnr 7th & 8th Avenue, Rietvallei
43.	Simunye Clinic	556 Inkululeko Road, Westonaria
44.	Tarlton Clinic	Nelson Mandela Community Centre, Cecilia street, Tarlton
45.	Thusanang CHC	786 Moeketsi Street, Kokosi, 2515
46.	Thusanang 2 At Westonaria Clinic	Thusanang, Glenharvie, Westonaria
47.	Thusong Clinic	12527 Dinsley Street, Kagiso
48.	Venterpos Clinic	115 Carlton Str., Venterpos, Westonaria
49.	Wedela Clinic	504 1ST Avenue, Wedela, 2499
50.	Welverdiend Clinic	40 Main Road, Welverdiend, 2499
51.	Westonaria Clinic	Sultana Street, Westonaria
52.	Ya Rona Clinic	6644 Ralerata Street, Ext. Mohlakeng
53.	Zuurbekom Clinic	Plot 179 2nd Street, Zuurbekom

GAUTENG PROVINCE
HEALTH
REPUBLIC OF SOUTH AFRICA

GT/GDH/050/2026 APPOINTMENT OF SERVICE PROVIDERS TO RENDER COMPREHENSIVE HEALTH CARE RISK WASTE MANAGEMENT SERVICES FOR THE GAUTENG DEPARTMENT OF HEALTH INSTITUTIONS FOR A PERIOD OF 36 MONTHS

	NAME	**ADDRESS**
54.	West Rand Regional Pharmacy	139 Memorial Avenue, Monument, Krugersdorp, 1739
	NAME	**ADDRESS**
55.	Azaadville Dental	C/O Taj Mahal & Azaad Avenue
56.	Bekkersdal Dental	C/O Kgomo & Tlhaba Street, Bekkersdal
57.	Dr Yusuf Dadoo Dental	Hospital street, Krugersdorp
58.	Hekpoort Dental	R563, Gauteng, Hekpoort, 1790
59.	Khutsong Dental	Community Health Centre, Khutsong
60.	Leratong Hospital Dental	Adhock street, Krugersdorp
61.	ML Pessen Dental	Cnr Sutherland & Park Streets, Randfontein
62.	Mogale Dental	Koster Rd. (next to SAPS), Magaliesburg
63.	Mohlakeng Dental	0726 Ralerata St, Mohlakeng, Randfontein, 1766
64.	Munsieville Dental	Mokgatle Street, Munsieville
	NAME	**ADDRESS**
65.	Bekkersdal EMS	C Complex, Bekkersdal (inside Bekkersdal MOU)
66.	Carletonville EMS	Inside Carletonville hospital
67.	DR. Yusuf Dadoo EMS	Inside Dr. Yusuf Dadoo hospital
68.	Fochville EMS	21 School Street Fochville 2515
69.	Khutsong EMS	Kutshong MOU
70.	Leratong EMS	Inside Leratong hospital
71.	Mohlakeng EMS	C/O Six & Park Street, Randfontein
	NAME	**ADDRESS**
72.	Carletonville	30 Kleim Street, Ext 6 Carletonville

GAUTENG PROVINCE
HEALTH
REPUBLIC OF SOUTH AFRICA

GT/GDH/050/2026 APPOINTMENT OF SERVICE PROVIDERS TO RENDER COMPREHENSIVE HEALTH CARE RISK WASTE MANAGEMENT SERVICES FOR THE GAUTENG DEPARTMENT OF HEALTH INSTITUTIONS FOR A PERIOD OF 36 MONTHS

EKURHULENI DISTRICT		
	NAME	**ADDRESS**
1.	Bertha Gxowa Hospital	Joubert St, Germiston, Johannesburg, 1401
2.	Far East Rand Hospital	Hospital Street, Springs
3.	Pholosong Hospital	Ndaba Street, Tsakane
4.	Tambo Memorial Hospital	Railway Street, Boksburg
5.	Tembisa Hospital	Industrial Road, Olifantsfontein
6.	Thelle Mogoerane Hospital	146 Hospital Road, Skosana Section, Katlehong
	NAME	**ADDRESS**
7.	Bertha Gxowa Gateway Dental	Cnr Joubert & Angus Street, Germiston, 1401
8.	Brakpan Dental	3334 Fingo Street, Tsakane, Brakpan
9.	Daveyton Main Dental	Stand 9307, Empilweni Street, Daveyton
10.	Dawnpark Dental	64 Crossing Road, Dawn Park, Boksburg
11.	Duduza Dental	Nala Street, Duduza
12.	Edenvale Dental	113 Van Riebeeck Avenue, Edenvale
13.	Elsburg Dental	C/O Els & Voortrekker, Elsburg
14.	Esangweni Dental	219 Esangweni Section, Tembisa
15.	First Avenue Dental	103 1st Avenue, Edenvale, Johannesburg, 1609
16.	Geluksdal Dental	1 Uittog street, Geluksdal
17.	Goba Dental	310 Goba Section, Katlehong
18.	Isabella Dental	29 Heliotrope Street, Kempton Park

GAUTENG PROVINCE
HEALTH
REPUBLIC OF SOUTH AFRICA

GT/GDH/050/2026 APPOINTMENT OF SERVICE PROVIDERS TO RENDER COMPREHENSIVE HEALTH CARE RISK WASTE MANAGEMENT SERVICES FOR THE GAUTENG DEPARTMENT OF HEALTH INSTITUTIONS FOR A PERIOD OF 36 MONTHS

19.	Jabulani Dumane Dental	257 Nguza Street, Ext. 2, Vosloorus
20.	Kingsway Dental	113 Kingsway, Brakpan
21.	Kwa-Thema Dental	7001 Moshoeshoe Street, Kwa-Tehma
22.	Mary Moodley Dental	732 Khan Crescent, Actonville
23.	Mofokeng Dental	667 Mofokeng Street, 1431
24.	Nokuthela Ngwenya Dental	Vlakfontein Road, Dunnottar
25.	Northmead Dental	Hospital & Aster Street, Northmead
26.	Phillip Moyo CHC Dental	6944 Etwatwa Ext. 9, Etwatwa
27.	Phola Park Dental	10054 Extension, Polapark
28.	Pholosong Dental	Ndaba Street, Tsakane
29.	Reiger Park Dental	Reiger Park Clinic, Leon Ferreira Drive, Reiger Park
30.	Springs Dental	1st Avenue, Springs
31.	Tambo Memorial Dental	Railway street, Plantation, Boksburg
32.	Tembisa Dental	Tembisa Hospital
33.	Thelle Mogoerane Hospital Dental	12390 Nguza Street, Extension 14,Vosloorus
34.	Tsakane Dental	10890 Zulu St, Tsakane, Brakpan, 1550
35.	Vosloorus Poly Dental	30 Ditshego Street, Vosloorus
36.	Winnie Mandela Dental	Madiba Drive, Winnie Mandela, Johannesburg, 1632
	NAME	**ADDRESS**
37.	Andries Raditsela Clinic	1781 Phooko Str.
38.	Bertha Gxowa Family Medicine Clinic	Bertha Gxowa Hospital, Cnr Angus and Joubert Street
39.	Crystal Park Clinic (Rehabilitation)	565 Strand Street,Crystal Park, 1501
40.	Daveyton Main Clinic	9307 Empilweni Street, Daveyton.
41.	Esangweni CHC	219 Esangweni Section

GAUTENG PROVINCE
HEALTH
REPUBLIC OF SOUTH AFRICA

GT/GDH/050/2026 APPOINTMENT OF SERVICE PROVIDERS TO RENDER COMPREHENSIVE HEALTH CARE RISK WASTE MANAGEMENT SERVICES FOR THE GAUTENG DEPARTMENT OF HEALTH INSTITUTIONS FOR A PERIOD OF 36 MONTHS

42.	Ethafeni MOU	43 Benin St, Ethafeni, Tembisa, 1632
43.	Jabulane Dumane CHC	257 Nguza Street, Vosloorus
44.	Kwa-Thema CHC	7001 Moshoeshoe Street, Kwa-Tehma
45.	Mary Moodley Memorial Clinic	732 Khan Crescent
46.	Nokuthela Ngwenya CHC	Vlakfontein Road, Dunnottar, Nigel
47.	Northmead Clinic	Hospital and Aster Road, Northmead
48.	Phillip Moyo CHC	Stand 6944, Etwatwa, Ext9 Mandela Section
49.	Phola Park CHC	10054 E1t 4, Mzimkhulu Str., Thokoza
50.	Ramokonopi MOU	819 Ramakonopi West, Katlehong
51.	Tsakane Male Circumcision Clinic	2nd Floor, Block Tsakane Old Clinic 10890 Zulu Street Opposite Tsakane Stadium

	NAME	**ADDRESS**
52.	Dunswart Laundry	Cason Road, Dunswart, Boksburg
	NAME	**ADDRESS**
53.	Far East Rand EMS	Far East Rand Hospital
54.	Bertha Gxowa EMS	Angus Street, Germiston
55.	Pholosong EMS	Pholosong Hospital
56.	Tembisa EMS	Andrew Mapheto,Tembisa
57.	Thelle Mogoerane EMS	12390 Nguza Street, Extension 14,Vosloorus
	NAME	**ADDRESS**
58.	Germiston FPS	10 Long St, Germiston
59.	Springs FPS	1st Avenue, Geduld

GAUTENG PROVINCE
HEALTH
REPUBLIC OF SOUTH AFRICA

GT/GDH/050/2026 APPOINTMENT OF SERVICE PROVIDERS TO RENDER COMPREHENSIVE HEALTH CARE RISK WASTE MANAGEMENT SERVICES FOR THE GAUTENG DEPARTMENT OF HEALTH INSTITUTIONS FOR A PERIOD OF 36 MONTHS

SEDIBENG DISTRICT		
	NAME	**ADDRESS**
1.	Heidelberg Hospital	C/O Verwoerd & Hospital Street, Heidelberg
2.	Kopanong Hospital	Comaro Street, Vereeniging
3.	Sebokeng Hospital	Moshoeshoe Street, Sebokeng
	NAME	**ADDRESS**
4.	Johan Heyns Pharmacy	C/O Frikkie Meyer & Pasteur Boulevard Vanderbijlpark
	NAME	**ADDRESS**
5.	Albertina Sisulu Clinic	14863 Zone 11, Sebokeng
6.	Beverly Hills Clinic	1971 Hollywood Street, Evaton West
7.	Boipatong CHC	1990 Lekoa Street
8.	Boitumelo Clinic	2001 Mandela Drive, Boitumelo
9.	Bophelong Clinic	632 Matthew Street, Bophelong
10.	Dr Helga Kuhn Clinic	2063 Chestnut street, Palm Springs
11.	Driehoek Clinic	Stuttaford Street, Vanderbijlpark
12.	Empilisweni Clinic	7724 Ezindimenvi, Johan van der Merwe, Sebokeng, Zone 7
13.	Evaton Main Clinic	1459 Adams Road, Evaton
14.	Heidelberg Clinic	50 Ueckermann Street, Lesedi
15.	Jameson Park Clinic	Darby Avenue, Jameson Park
16.	Johan Deo Clinic	1098 Polokong 1983
17.	Johan Heyns CHC	C/O Frikkie Meyer & Pasteur Boulevard Vanderbijlpark
18.	Kookrus Clinic	Cnr Verwoerd Avenue & Marthinus Oosthuizen Street, Meyerton, 1961
19.	Levai Mbatha CHC	814 Hamilton Road

GAUTENG PROVINCE
HEALTH
REPUBLIC OF SOUTH AFRICA

GT/GDH/050/2026 APPOINTMENT OF SERVICE PROVIDERS TO RENDER COMPREHENSIVE HEALTH CARE RISK WASTE MANAGEMENT SERVICES FOR THE GAUTENG DEPARTMENT OF HEALTH INSTITUTIONS FOR A PERIOD OF 36 MONTHS

20.	Market Ave Clinic	22 Market Avenue, Vereeniging
21.	Meyerton Main Clinic	Portion 195 of 1053, Meyerton. C/O Boet Kruger str. & Eeufees Singel, Meyerton
22.	Mpumelelo (Evaton North) Clinic	1836 Rabotapi Street, Evaton North
23.	Osizweni Clinic	320 West Road, Evaton
24.	Pontshong (Walkerville) Clinic	Plot 62, 3rd Avenue, Balmoral Estates, De Deur
25.	Randvaal Clinic	84 Rooibok street, Randvaal
26.	Ratanda Ext 23 Clinic	Erf 3148, Ratanda Ext 23 / 6461, Gudlhuza street, Ratanda
27.	Ratanda Ext 7 Clinic	Nelson Mandela Drive
28.	Ratanda PHC	2844 Boschoek Street, Ratanda, Heidelberg
29.	Rensburg Clinic	C/O Roets & Cilliers Street, Rensburg, Heidelberg
30.	Retswelapele Clinic	8884 Mareka Street
31.	Rietspruit Clinic	Phakoago St
32.	Rus ter vaal Clinic	1 Kiepersol Street
33.	Sebei Motsoeneng Clinic	Stand 7419 (Stand 5964)
34.	Sebokeng Zone 13 Clinic	76 Kanelo street, Zone 13, Sebokeng
35.	Sebokeng Zone 14 Clinic	Stand 65 Zone 14, Sebokeng
36.	Sebokeng Zone 17 Clinic	62064 Zone 17, Sebokeng
37.	Sebokeng Zone 3 Clinic	570014, Zone 3, Sebokeng
38.	Sharpeville CHC	9173 Zwane Street
39.	Tlhokomelong Clinic	43 - 6 Thandi Modise Street, Small Farm
40.	Tshepiso Clinic	1986 Tshepiso
41.	Usizolwethu Clinic	C/O Lillian and Botha Street Devan
42.	Vischuil Clinic	116 Melman Street

GAUTENG PROVINCE
HEALTH
REPUBLIC OF SOUTH AFRICA

GT/GDH/050/2026 APPOINTMENT OF SERVICE PROVIDERS TO RENDER COMPREHENSIVE HEALTH CARE RISK WASTE MANAGEMENT SERVICES FOR THE GAUTENG DEPARTMENT OF HEALTH INSTITUTIONS FOR A PERIOD OF 36 MONTHS

	NAME	**ADDRESS**
43.	Boipatong Dental	1993 Lekoa Str., Boipatong
44.	Bophelong Dental	632 Matthews street, Bophelong
45.	Empilisweni Dental	Empilisweni CHC, 7724 Ezemedevheni, Sebokeng
46.	Johan Heyns Dental	Johan Heyns CHC, Frikkie Meyer Street, Van der Bijl
47.	Kopanong Dental	Kopanong Hospital, Cassion weg, Duncanville, Vereeniging
48.	Levai Mbatha Dental	814 Hamilton Road
49.	Meyerton Dental	Julius Street, Meyerton
50.	Ratanda Dental	506 Boschhoek Str., Rathanda
51.	Sebokeng Dental	Sebokeng Hospital, Moshoeshoe Str., Sebokeng
52.	Sharpeville Dental	9173 Zwane Street, Sharpville
	NAME	
53.	Devon EMS	
54.	Evaton EMS	
55.	Heidelberg EMS	
56.	Meyerton EMS	
57.	Sebokeng EMS	
58.	Vanderbijlpark EMS	
59.	Vereeniging EMS	
	NAME	
60.	Heidelberg FPS	Ext 9,Heidelberg
61.	Sebokeng FPS	P88 Moshoeshoe Street, Sebokeng, 1983

GAUTENG PROVINCE
HEALTH
REPUBLIC OF SOUTH AFRICA

GT/GDH/050/2026 APPOINTMENT OF SERVICE PROVIDERS TO RENDER COMPREHENSIVE HEALTH CARE RISK WASTE MANAGEMENT SERVICES FOR THE GAUTENG DEPARTMENT OF HEALTH INSTITUTIONS FOR A PERIOD OF 36 MONTHS

TSHWANE DISTRICT		
	NAME	**ADDRESS**
1.	Bronkhorstpruit Hospital	1 Barney Hurwitz Avenue, Riamarpark, Bronkhorstspruit, 1020
2.	Cullinan Care Rehabilitation Centre	Zonderwater Rd, Cullinan, 1000
3.	Dr. George Mukhari Hospital	38 Lisaai Street, Attridgeville
4.	Jubilee Hospital	Jubilee Hospital, Jubilee Road, Hammmaskraal, 0400
5.	Kalafong Hospital	Kalafong road, Atteridgeville, Pretoria,0001
6.	Mamelodi Hospital	Tsamaya Road, Rathabile
7.	Medunsa Oral & Dental Hospital	Medunsa Street, Ga-Rankuwa, Gauteng 0208
8.	ODI Hospital	ODI District Hospital, Private Bag X 509, Mabopane, 0190
9.	Pretoria Oral & Dental Hospital	Steve Biko & Dr Savage Road, Riveria, Pretoria, 0084
10.	Pretoria West Hospital	Cnr. Styze Wierda & Morkel Street East, Pretoria West
11.	Steve Biko Academic Hospital	Dr. Savage Road, Pretoria
12.	Tshwane District Hospital	C/O Dr Savage & Voortrekker Road
13.	Tshwane Rehab Hospital	C/O Dr Savage & Voortrekker Road
14.	Weskoppies Mental Hospital	Ketjen Street, Ext., Pretoria
	NAME	**ADDRESS**
15.	Adelaide Tambo Clinic	Fanie van Rensburg Street, Pyramid, Tshwane, Gauteng, 0120
16.	Block JJ Satellite Clinic	1834 Block BB, Soshanguve
17.	Block TT Satellite Clinic	1630 Block H, Soshanguve
18.	Block XX Clinic	Soshanguve Block X, 0152
19.	Boekenhout Clinic	705 Block A, Mabopane

GAUTENG PROVINCE
HEALTH
REPUBLIC OF SOUTH AFRICA

GT/GDH/050/2026 APPOINTMENT OF SERVICE PROVIDERS TO RENDER COMPREHENSIVE HEALTH CARE RISK WASTE MANAGEMENT SERVICES FOR THE GAUTENG DEPARTMENT OF HEALTH INSTITUTIONS FOR A PERIOD OF 36 MONTHS

20.	Boikhutsong Clinic	1266 Block T, Soshanguve
21.	Bophelong Clinic	66 Masokha Street, Saulesville
22.	Bronkhorstspruit Clinic	C/O Mark & Botha Str.
23.	Dark City CHC	Stand 1227, Dark City
24.	De Wagensdrift Satellite Clinic	1195 Masina Drive, Cullinan
25.	Dilopye Clinic	Dilopye Village
26.	Eersterus CHC	214 Willie Swart, Eersterus
27.	Ekangala Clinic	Stand 1227, Ekangala Extension D, Ekangala
28.	Ga-Rankuwa View Clinic	0208 Kgaka St, Ga-Rankuwa View, 0208
29.	Holani Clinic	19600 Tlou Str., Mamelodi East
30.	Kameeldrift Clinic	Plot 175, Kameeldrift, Roodeplaat Area, 0035
31.	Kanana Clinic	45 Swavelpoort Street, Kameelzyn kraal
32.	Kekana Gardens Clinic	1078 Pfananani
33.	Kekanstad Clinic	Majaneng Village
34.	Kgabo CHC	1526 Sefatsa Str., Winterveldt
35.	KT Motubatse CHC	20941 Mahlangu St, Soshanguve South, Ext 4
36.	Laudium CHC	Cnr. Bengal & 25th Avenue, Laudium
37.	Mandisa Shiceka Clinic	Portion 60, Mandela Village Ext., Hammmaskraal
38.	Maria Rantho Clinic	3180 Block L
39.	NEW Eersterus Clinic	Stinkwater, Hammmaskraal
40.	Onverwacht Clinic	Plot 75, Onverwacht, Cullinan, Gauteng, 1002
41.	Phedisong 1 Clinic	9034 Zone 4, Garankuwa
42.	Phedisong 4 CHC	6102 Zone 4, Garankuwa
43.	Phedisong 6 Clinic	7389 Zone 6, Garankuwa

GAUTENG PROVINCE
HEALTH
REPUBLIC OF SOUTH AFRICA

GT/GDH/050/2026 APPOINTMENT OF SERVICE PROVIDERS TO RENDER COMPREHENSIVE HEALTH CARE RISK WASTE MANAGEMENT SERVICES FOR THE GAUTENG DEPARTMENT OF HEALTH INSTITUTIONS FOR A PERIOD OF 36 MONTHS

44.	Jack Hindon Clinic	376 Jack Hinden Street, Pretoria North, Pretoria, 0182
45.	Ramotse Clinic	Ramotse Village
46.	Rayton Clinic	Montroos en Oakely Str., Rayton, 1001
47.	Refentse Clinic	Stinkwater, Mokone Block
48.	Refilwe Clinic	1164 Masina Drive, Refilwe, 1003
49.	Rethabiseng Clinic	Stand 310
50.	Sedilega Clinic	1662 Block U, Mabopane
51.	Skinner Clinic	8 Dr Rd, Prinshof 349-Jr, Pretoria
52.	Sokhulumi Clinic	220 Sokhulumi, Bronkhorstspruit, 1020
53.	Soshanguve Clinic 2	1850 Block G, Soshanguve
54.	Soshanguve Clinic 3 CHC (Block BB)	1834 Block BB, Soshanguve
55.	Stanza Bopape Clinic	Stand 2, Tshilovhane Street, Mamelodi East, Ext.5
56.	Suurman Clinic	Suurman Village
57.	Temba CHC	Temba extension
58.	Tlamelong Clinic	2734 Block B, Mabopane
59.	Ubuntu/ Lethabong clinic	Plot 3 Donkerhoek, R104,Pretoria 0122
60.	Winterfeldt Clinic	Plot 626 Dube Stand, Winterveldt
61.	Zamile Clinic	Winterveld, 0198
62.	Zithobeni Clinic	624 Kabini Street, Zithobeni,1024
	NAME	**ADDRESS**
63.	Tshwane Regional Pharmacy	Dr Savage Road, Pretoria, 0002
	NAME	**ADDRESS**
64.	Saulsville Oral & Dental	31 (a) Sekhu Street, Saulsville
65.	Zamile Oral & Dental	Winterveld, 0198

GAUTENG PROVINCE
HEALTH
REPUBLIC OF SOUTH AFRICA

GT/GDH/050/2026 APPOINTMENT OF SERVICE PROVIDERS TO RENDER COMPREHENSIVE HEALTH CARE RISK WASTE MANAGEMENT SERVICES FOR THE GAUTENG DEPARTMENT OF HEALTH INSTITUTIONS FOR A PERIOD OF 36 MONTHS

	NAME	**ADDRESS**
66.	Masakhane Laundry	Cnr. Piet Pretorius Str. & Hebron Rd, Rosslyn
	NAME	**ADDRESS**
67.	Atteridgeville EMS	220 Marivate street, Saulsville
68.	Bosman EMS	Cnr Bosman and Minaar Street, Pretoria
69.	Bronkhorstspruit EMS	Lanham Street Ext., Bronkhorstspruit
70.	Centurion EMS	254 Basden Ave, Centurion
71.	Cullinan Ambulance Base	Cullinan Rd, Zonderwater
72.	De Wagensdrift Ambulance Base	Plot 79, De Wagensdrift
73.	Ekangala EMS	Stand 452, Dark City,Ekangala A
74.	Hatfield EMS	979 Park Street, Hatfield
75.	Heulweloord EMS	9 Wildeperske Avenue, Heuweloord
76.	Innesdal EMS	666 Ben Swart street, Rietfontein, Pretoria
77.	Jabulani EMS	Soutpan Rd, Block V, Soshanguve
78.	Mamelodi East EMS	Sibande Street, Mamelodi
79.	ODI Ambulance Base	ODI District Hospital, Private Bag X 509, Mabopane, 0190
80.	Prinshof Ambulance Base	Theodore Hove Ave, Prinshof 349-Jr, Pretoria, 0084
81.	Rosslyn EMS	6977 Piet Rautenbach Str., Rosslyn
82.	Silverton EMS	217 Pretoria Street, Silverton
83.	Temba EMS	Street 1, Stands 9 and 10, Babelegi
84.	Wonderboom EMS	362 Borage avenue,Wonderboom
	NAME	**ADDRESS**
85.	Bronkhorstspruit FPS	47 Kruger St, Bronkhorstspruit
86.	Pretoria FPS	10 Dr Savage Rd, Riviera

GAUTENG PROVINCE
HEALTH
REPUBLIC OF SOUTH AFRICA

87.	Garankuwa FPS	6543 Kgotleng Street, Zone 5 Garankuwa 0208
	NAME	**ADDRESS**
88.	Lebone EMS College	43 Cnr Steve Biko & Belvedere Street, Arcadia, Pretoria, 0083

GAUTENG PROVINCE
HEALTH
REPUBLIC OF SOUTH AFRICA

GT/GDH/050/2026 THE APPOINTMENT OF SERVICE PROVIDERS TO RENDER COMPREHENSIVE HEALTH CARE RISK WASTE MANAGEMENT SERVICES FOR THE GAUTENG DEPARTMENT OF HEALTH INSTITUTIONS FOR A PERIOD OF 36 MONTHS

ANNEXURE 2: EVALUATION METHODOLOGY AND SPECIAL CONDITIONS

1. THE EVALUATION METHODOLOGY

The evaluation of the bids will be done in accordance with the requirements of the Preferential Procurement Policy Framework Act (Act 5 of 2000), the Preferential Procurement Regulations, 2022 and the GDoH Supply Chain Management policy in two stages:

STAGE 1
Stage 1A: Mandatory Administrative Compliance
Stage 1B: Desktop Evaluation - Functionality
Stage 1C: Site Visit Evaluation

STAGE 2: Preference Points System

STAGE 1A: MANDATORY ADMINISTRATIVE COMPLIANCE

All bids received will be subjected to a mandatory administrative compliance in line with the below requirements. Any bidder who fails to comply with any of the said mandatory criteria will be disqualified.

a. Proof of Bidder's treatment/storage facility -
   i. If the Bidder is the **owner of the treatment/storage facility**, they must submit a copy of a valid Department of Forestry, Fisheries and Environment (DFFE) licence/permit for treatment and storage
   OR
   ii. If the Bidder **outsources the treatment/storage facility**, they must submit a copy of an Agreement/affidavit signed by both parties. The bidder must also submit a copy of the outsourced facility's DFFE license/permit for the treatment and storage.

b. Bidder must submit a copy of their valid permit and certificate for **Transporter Authorisation**, issued by the Gauteng Department of Agriculture and Rural Development (GDARD). The authorisation of the bidder must be valid closing date of the bid.

c. Bidder must submit a copy of the valid **Effluent Water compliance** permit or letter, issued by the relevant local government or authority, in line with treatment facility submitted under point 'a' above.

d. Bidder must submit a valid original certified copy of their South African Waste Information System (SAWIS) or Gauteng Waste Information System (GWIS) registration certificate, in line with treatment facility submitted under point 'a' above.

e. Bidder must submit a copy of their valid **Atmospheric Emission Licence (AEL)**, issued by a relevant municipality or licensing authority, to ensure legal compliance, in line with treatment facility submitted under point 'a' above. The requirement applies to waste treatment technologies involving combustion processes, such as incineration.

f. Appointment letter of **Pharmacist**, certified copy of ID, certified copy of registration at South African Pharmacy Council and valid proof of membership, in line with treatment facility submitted under point 'a' above.

g. Bidder must submit proof of their **Liability Insurance Cover** of not less than R5 million, issued by an insurance company registered and authorised to operate in South Africa.

h. All SBD's must be read, completed, signed where applicable and submitted.
   i. SBD 1: Invitation to Bid
   ii. SBD 4: Bidder's Disclosure

i. Bidder must submit a duly completed and signed GPG Integrity Pact for Businesses

Note: Where a "***certified copy***" is required, bidders must submit a copy of the original document certified as a true copy by a Commissioner of Oaths and bearing the original signature and stamp of the Commissioner of Oaths. Photocopies, scanned copies, or reproductions of certified copies will not be accepted for compliance purposes.

Note: Any bidder who fails to comply with any of the above listed mandatory requirements will be disqualified.

STAGE 1B: DESKTOP EVALUATION – FUNCTIONALITY CRITERIA

Only bidders who have complied with all the **mandatory Administrative** requirements will be evaluated for functionality. During this stage, bidders' response will be evaluated for functionality. Therefore, bidders must as part of their bid submission provide supporting documents for all functionality requirements, as indicated or guided by the table below.

During this phase, bidders' response will be evaluated for functionality based on achieving a **minimum threshold score of 63 points out of 79 points** for functionality. Failure to achieve the minimum score will invalidate the bid and will not be considered for further evaluation

GAUTENG PROVINCE
HEALTH
REPUBLIC OF SOUTH AFRICA

GT/GDH/050/2026 THE APPOINTMENT OF SERVICE PROVIDERS TO RENDER COMPREHENSIVE HEALTH CARE RISK WASTE MANAGEMENT SERVICES FOR THE GAUTENG DEPARTMENT OF HEALTH INSTITUTIONS FOR A PERIOD OF 36 MONTHS

Table 1: Functionality Evaluation Criteria

NO.	CATEGORY	CRITERIA	SCORE
1.	**Approach and Methodology**	**Bidder to provide a detailed approach and methodology regarding the execution of the project based on the terms of reference. Proposed project plan indicating the approach as follows:**	**30**
		1.1. Confirmation of wash bay at treatment plant or verification of location of wash bay. Bidder must attach photographs/pictures with a minimum of two-minute video clip on a USB demonstrating proper functional treatment plant, as per the TOR. a. Submitted all photographs/pictures and video clip **(10 points)** b. Submitted all photographs/pictures without video clip **(5 points)** c. No photographs/pictures or video clip **(0 points)**	
		1.2. Contingency plan document addressing failure of all-inclusive services covering the following elements - 1) Collection 2) Transportation 3) Treatment 4) Final disposal of residue disposal 5) Storage area for HCRW. a. Contingency Plan addresses all 5 elements **(10 points)** b. Contingency Plan addresses 4 elements **(8 points)** c. Contingency Plan addresses 3 elements **(6 points)** d. Contingency Plan addresses 2 elements **(4 points)** e. Contingency Plan addresses 1 element **(2 points)** f. Contingency Plan addresses 0 elements or no submission **(0 points)**	

GAUTENG PROVINCE
HEALTH
REPUBLIC OF SOUTH AFRICA

GT/GDH/050/2026 THE APPOINTMENT OF SERVICE PROVIDERS TO RENDER COMPREHENSIVE HEALTH CARE RISK WASTE MANAGEMENT SERVICES FOR THE GAUTENG DEPARTMENT OF HEALTH INSTITUTIONS FOR A PERIOD OF 36 MONTHS

NO.	CATEGORY	CRITERIA	SCORE
		1.3. Verification of decontamination systems and chemicals used for this purpose, minimum decontamination systems required. Provide Standard Operating Procedure (SOP) addressing the following procedures: 1) Decontamination procedure. 2) Chemicals (including drying procedures) used for reusable containers. a. SOP addresses the 2 procedures **(10 points)** b. SOP addresses only 1 procedure **(5 points)** c. SOP addresses 0 procedures or no submission **(0 points)**	
2.	**Company Experience**	2.1. Bidder must provide contractual proof of previous contract(s) of not less than R10 million, as a record of accomplishment in the management of medical waste in the public or private sector of South Africa. *Note – evidence must meet minimum contract value and years of experience to score points.* Portfolio of evidence (contract period proof) indicative of the contract value and years of experience: a. 5 years or more experience and a R 10 million minimum required value **(20 points)** b. 3 years to less than 5 years' experience and a R 10 million minimum required value **(15 points)** c. 1 year to less than 3 years' experience and a R 10 million minimum required value **(10 point)** d. Less than a year's experience and a R 10 million minimum required value **(5 points)** e. No relevant experience and submitted evidence meeting all requirements **(0 points)**	**20**

GAUTENG PROVINCE
HEALTH
REPUBLIC OF SOUTH AFRICA

GT/GDH/050/2026 THE APPOINTMENT OF SERVICE PROVIDERS TO RENDER COMPREHENSIVE HEALTH CARE RISK WASTE MANAGEMENT SERVICES FOR THE GAUTENG DEPARTMENT OF HEALTH INSTITUTIONS FOR A PERIOD OF 36 MONTHS

NO.	CATEGORY	CRITERIA	SCORE
3.	**Competency Skills**	3.1. Bidder to demonstrate knowledge and understanding of Health and Safety policy by submitting Health and Safety file with the following: a. Appointment letters for Health and Safety Representatives (minimum of 1 letter) **(1 point)** b. Appointment letter of a First Aider **(1 point)** c. Appointment letter of a Fire Marshal **(1 point)** d. Proof of induction training on Hazardous Biological Agents and Hazardous Chemical Agents Regulations **(1 point)** e. Previous Risk Assessment reports (minimum of 1 report) **(1 point)** f. Minutes of the recent Health and Safety committee meeting (minimum of 1) **(1 point)** g. Personal Protective Equipment (PPE) policy **(1 point)** h. Appointment letter of Safety Officer **(1 point)** i. Proof of training for Health and Safety **(1 point)** j. Proof of routine/periodic medical surveillance for all staff **(1 point)** k. Copy of valid COIDA Letter of good standing from the Department of Employment and Labour **(1 point)**	**11**
4.	**Driver requirements for transporting Dangerous Goods**	4.1. Bidder to demonstrate availability for a minimum of 5 (five) drivers with valid permits for transporting hazardous goods (Category D - Dangerous Goods). Bidder must submit proof of their Drivers valid South African Driver License, together with each driver's valid Professional Driving Permit (PrDP) for transporting hazardous goods (Category D - Dangerous Goods)	**5**

GAUTENG PROVINCE
HEALTH
REPUBLIC OF SOUTH AFRICA

GT/GDH/050/2026 THE APPOINTMENT OF SERVICE PROVIDERS TO RENDER COMPREHENSIVE HEALTH CARE RISK WASTE MANAGEMENT SERVICES FOR THE GAUTENG DEPARTMENT OF HEALTH INSTITUTIONS FOR A PERIOD OF 36 MONTHS

NO.	CATEGORY	CRITERIA	SCORE
		a. 5 valid Transport Drivers with supporting licenses and permits **(5 points)** b. 3 to 4 valid Transport Drivers with supporting licenses and permits **(4 points)** c. 2 valid Transport Drivers with supporting licenses and permits **(3 points)** d. 1 valid Transport Driver with supporting license and permit **(2 points)**	
5.	**Training Service Requirements**	5.1. Bidder to demonstrate training services requirements as follows: **a. Evidence of Training Services (1 point)** i. Bidder is the provider of training services - submit proof of valid registration/accreditation with the relevant HWSETA. OR ii. Bidder is outsourcing the training services - submit a copy of the signed Service Level Agreement (SLA) or contract between the bidder and the training service provider, including proof of the training service provider's valid registration/accreditation with the relevant HWSETA. Or a signed Letter of Intent from the training service provider confirming its commitment to provide the required training services on behalf of the bidder, including proof of the training service provider's valid registration/accreditation with the relevant HWSETA **b. Evidence of Training Programme (1 point)** i. Bidder must submit proof that the proposed training program is endorsed by the Health Professions Council of South Africa (HPCSA) for Continuing Professional Development (CPD) points. The proof of endorsement should be in the name of the bidder or the outsourced training service provider.	**8**

GAUTENG PROVINCE
HEALTH
REPUBLIC OF SOUTH AFRICA

GT/GDH/050/2026 THE APPOINTMENT OF SERVICE PROVIDERS TO RENDER COMPREHENSIVE HEALTH CARE RISK WASTE MANAGEMENT SERVICES FOR THE GAUTENG DEPARTMENT OF HEALTH INSTITUTIONS FOR A PERIOD OF 36 MONTHS

NO.	CATEGORY	CRITERIA	SCORE
		c. Evidence of Training Facilitator (4 points) Bidder must submit supporting documentation for the proposed Facilitator: i. Valid accreditation certificate **(1 point)** ii. Qualification(s) in Nursing/ Environmental Health or any health-related field **(1 point)** iii. Proof of valid and active registration with relevant professional body **(1 point)** iv. CV demonstrating a minimum 3 years' experience in any of the following fields of Healthcare Waste (HCW), Infection Prevention and Control, Environmental Health, Occupational Health and Safety and/or Quality Assurance **(1 point)** **d. Bidder must submit a copy of the training programme manual(s) proposed for use in delivering the training services accredited and/or aligned with relevant HWSETA (1 point)** **e. Bidder must submit a minimum of three (3) client evaluation reports** relating to similar training services previously provided. The reports must be signed by the client(s) serviced **(1 point)**	
6	**Proof of Source of supply/ confirmation as a manufacture/ distributorship**	6.1. Bidder to submit evidence to confirm continued supply of consumables as per the scope of work, paragraph 4 as follows: a. Bidder must submit a confirmation letter that they will be manufacturing such products offered to the Department. The confirmation letter must list all items offered and state that the offer shall be for the duration of the contract **(5 points)** **OR** b. In the case where products are not produced/manufacture by the bidder.	**5**

GAUTENG PROVINCE
HEALTH
REPUBLIC OF SOUTH AFRICA

GT/GDH/050/2026 THE APPOINTMENT OF SERVICE PROVIDERS TO RENDER COMPREHENSIVE HEALTH CARE RISK WASTE MANAGEMENT SERVICES FOR THE GAUTENG DEPARTMENT OF HEALTH INSTITUTIONS FOR A PERIOD OF 36 MONTHS

NO.	CATEGORY	CRITERIA	SCORE
		The Bidder must provide a letter or agreement from the source of supply confirming continued supply of the offered products for the duration of the contract. Such a letter/agreement must be duly signed by an authorised representative of the source of supply. One or more letters/agreements covering all offered items will be accepted. **(5 points)** c. No relevant information provided **(0 points)**	
TOTAL POINTS			**79**
MINIMUM THRESHOLD POINTS			**63**

The bids will be declared non-responsive and disqualified, if it does not meet the minimum threshold of 63 points for the Functionality evaluation.

STAGE 1C: SITE VISIT EVALUATION CRITERIA

Only bidders who have complied with the functionality evaluation threshold will be evaluated for Site Visit. The purpose of the Site Visit Evaluation is to verify the information submitted by the bidder and to assess the bidder's operational capacity, capability and competence in relation to the proposed Treatment Facility and Storage Facilities.

The Department reserves the right to conduct site inspections at reasonable times. Bidders shall ensure that authorised representatives of the Department are granted full access to the facilities and are provided with all information and documentation reasonably required to complete the evaluation. The facilities inspected must comply with the Site Visit evaluation criteria contained in this bid document.

IMPORTENT NOTES:

Treatment/Storage Facility locations:

a. The Site Visit evaluation will only be conducted at the **Treatment Facility and the primary Storage Facility**, as per the bidder's submitted documents for Stage 1A: Mandatory Compliance requirements.
b. Where the Treatment Facility and/or Storage Facility is leased or otherwise not owned by the bidder, the bidder shall ensure that the Department is granted unrestricted access to the premises for purposes of the site inspection. The bidder must be present during the inspection to facilitate the evaluation. Failure to provide access to the facilities will result in the bidder being disqualified.

c. If the bidder uses a different site or location for the storage of consumables, the site visit will be **limited** to the **Treatment Facility** and the **primary Storage Facility** of the bidder, for evaluation purposes.

Sourcing of consumables:

d. At the **primary Storage Facility**, bidders will be required to present documentary evidence demonstrating the sourcing of the consumables, in the form of a **valid South African Health Products Regulatory Authority (SAHPRA) Manufacturing License** or **Wholesale License**.

e. The SAHPRA license shall:
   - be issued in the name of the bidder; or
   - be supported by a valid agreement between the license holder and the bidder; or
   - be supported by a Letter of Intent issued by the license holder confirming its commitment to supply the bidder.

f. As a minimum, the SAHPRA license shall cover the following medical devices, where applicable:
   1) Liners – MD Class A
   2) Brackets and baskets - MD Class A
   3) Free standing racks - MD Class A
   4) Pedal bins - MD Class A
   5) Spill kits - MD class depends on what kits consist of spill kits
   6) Bio-hazardous boxes and tape - MD Class A

g. Failure to produce the required documentary evidence for any of the above items during the site visit will result in the bidder forfeiting the points allocated to that specific item in the Site Visit Evaluation criteria

Table 2: Site Visit evaluation criteria **[PRIMARY STORAGE FACILITY]**

ITEM NO.	CRITERIA - [PRIMARY STORAGE FACILITY]	POINTS
1.	**OHS REQUIREMENTS**	**11**
1.1	Heavy Duty Gloves **(1 point)**	
1.2	Overalls/ coverall **(1 point)**	
1.3	Safety Shoes **(1 point)**	
1.4	Goggles or Visors **(1 point)**	
1.5	N95 respirator **(1 point)**	
1.6	FFP3 (Filtering Face Piece) **(1 point)**	
1.7	Hard hat **(1 point)**	
1.8	First Aid kit with contents **(2 points)**	
1.9	Serviced Firefighting equipment (fire extinguisher or hose reel) **(2 points)**	
2.	**HYGIENE: Hygiene procedures and tools**	**10**
2.1	Hand wash facilities **(2 points)**	
2.2	Hand drying facilities **(2 points)**	
2.3	Running water (both hot and cold) **(2 points)**	

GAUTENG PROVINCE
HEALTH
REPUBLIC OF SOUTH AFRICA

GT/GDH/050/2026 THE APPOINTMENT OF SERVICE PROVIDERS TO RENDER COMPREHENSIVE HEALTH CARE RISK WASTE MANAGEMENT SERVICES FOR THE GAUTENG DEPARTMENT OF HEALTH INSTITUTIONS FOR A PERIOD OF 36 MONTHS

ITEM NO.	CRITERIA - [PRIMARY STORAGE FACILITY]	POINTS
2.4	Pest control system available (bidder to avail proof of SLA / Contract) **(2 points)**	
2.5	Liquid Hand Soap **(2 points)**	
3.	**CHANGE ROOMS**	**10**
3.1	Ablution facilities with pictogram (signage) **(2 points)**	
3.2	Lockers **(2 points)**	
3.3	Showers **(2 points)**	
3.4	Hand wash facilities **(2 points)**	
3.5	Hand drying facilities **(2 points)**	
4.	**STORAGE FOR CONTAINERS**	**5**
4.1	A separate storage area for unused containers **(1 point)**	
4.2	Availability of scanners and barcodes as proof of Tracking System for containers **(2 points)**	
4.3	Demonstration of a working tracking system for containers **(2 points)**	
5.	**LIST OF DISPOSABLE CONTAINERS TO BE ASSESSED ON SITE** ***Assessment of HCRW containers: Bidder to present THREE SAMPLES OF EACH CONTAINER, as listed below. The BEC will conduct the assessment as per the specification requirement stated on the TOR as follows:***	**33**
5.1	**Compliant:** Sharp containers (Refer to par. 4.6 and Table 3) **Container Sizes:** a. 1.5L container **(1 point)** b. 2.5L container **(1 point)** c. 5L container **(1 point)** d. 7.6L container **(1 point)** e. 10L container **(1 point)** f. 20L container **(1 point)** g. 700mm Disposable Tall slim sharps container **(1 point)** h. 900mm Disposable Tall slim sharps container **(1 point)**	8
5.2	**Compliant:** Specican/anatomical container (Refer to par. 4.6 and Table 4). **Container Sizes:** a. 2.5L container **(1 point)** b. 5L container **(1 point)** c. 10L container **(1 point)** d. 20L container **(1 point)**	4
5.3	**Compliant:** Pharmaceutical and chemical container (Refer to par. 4.6 and Table 5) **Container Sizes:** a. 5L container available **(1 point)** b. 10L container available **(1 point)**	4

GAUTENG PROVINCE
HEALTH
REPUBLIC OF SOUTH AFRICA

GT/GDH/050/2026 THE APPOINTMENT OF SERVICE PROVIDERS TO RENDER COMPREHENSIVE HEALTH CARE RISK WASTE MANAGEMENT SERVICES FOR THE GAUTENG DEPARTMENT OF HEALTH INSTITUTIONS FOR A PERIOD OF 36 MONTHS

ITEM NO.	CRITERIA - [PRIMARY STORAGE FACILITY]	POINTS
	c. 20L container available **(1 point)** d. 25L polycan container available on site **(1 points)**	
5.4	**Compliant:** Red Liners (Refer to par. 4.6. and Table 6). **Liner Sizes:** a. 2.5L liner available **(1 point)** b. 15L liner available **(1 point)** c. 30L liner available (both pedal bins, 25L box, kick-about for 20L sharps) **(1 point)** d. 30L liner with handles (dry wall bracket) **(1 point)** e. 40L liner available **(1 point)** f. 50L liner available **(1 point)** g. 60L liner available **(1 point)** h. 90L liner **(1 point)** i. 125L liner available **(1 point)** j. 140L liner available **(1 point)** k. 240L liner available **(1 point)** l. 650L liner available **(1 point)**	12
5.5	**Compliant:** Bio-hazard cardboard boxes (Refer to par. 4.6 and Table 7) **Infectious waste box sizes:** a. 25L box available **(1 point)** b. 50L box available **(1 point)** c. 140L box available **(1 point)**	3
5.6	**Compliant:** Spill kit content (refer to 4.6.10 and Table 8) **Spilled kit content Sizes:** a. 45L kit content available **(1 point)** b. 90L kit content available **(1 point)**	2
6.	**LIST OF REUSABLE CONTAINERS TO ASSESSED AT SITE *(refer to par. 4.7 for complete specification and Table 9)***	**11**
6.1	**Compliant:** Wheelie bins (dark green and red) – demonstration provided see **Figure 15** **Container Sizes:** a. 240L red wheelie bin available **(1 point)** b. 240L dark green wheelie bin available **(1 point)**	2
6.2	**Compliant:** Stackable containers: demonstration provided see **Figure 16** **Container Sizes:** a. 45L container available **(1 point)**	2

GAUTENG PROVINCE
HEALTH
REPUBLIC OF SOUTH AFRICA

GT/GDH/050/2026 THE APPOINTMENT OF SERVICE PROVIDERS TO RENDER COMPREHENSIVE HEALTH CARE RISK WASTE MANAGEMENT SERVICES FOR THE GAUTENG DEPARTMENT OF HEALTH INSTITUTIONS FOR A PERIOD OF 36 MONTHS

ITEM NO.	CRITERIA - [PRIMARY STORAGE FACILITY]	POINTS
	b. 90L container available **(1 point)**	
6.3	**Compliant:** Reusable Tall slim sharps: demonstration provided see **Figure 17** **Container Sizes:** a. 1500mm Reusable tall slim sharps **(1 point)**	1
6.4	**Compliant:** Pedal bins, demonstration provided see **Figure 13 and 14** **Pedal Bin Sizes:** a. Stainless steel pedal bins 25L **(1 point)** b. Stainless steel pedal 50L **(1 point)** c. Stainless steel pedal bin 90L **(1 point)** d. Plastic pedal bin 25L **(1 point)** e. Plastic pedal bin 60L **(1 point)** f. Plastic pedal bin 90L **(1 point)**	6
7.	**LIST OF DURABLE ITEMS TO BE EVALUATED - REFER TO TOR PAR. 4.3 (TABLE 2) FOR COMPLETE SPECIFICATIONS**	**8**
7.1	Sharps wall brackets **(1 point)**	
7.2	Nursing trolley sharps brackets **(1 point)**	
7.3	Nursing trolley baskets with lids **(1 point)**	
7.4	Wall Baskets with lids **(1 point)**	
7.5	Free standing racks with lids **(1 point)**	
7.6	Plastic brackets with lids **(1 point)**	
7.7	Kick-about trolleys **(1 point)**	
7.8	Central storage Signage **(1 point)**	
8.	**TRANSPORTERS**	**12**
8.1	HCRW collection vehicle/s equipped with spill kits with contents **(5 points)**	
8.2	HCRW vehicle/s clearly marked with the biohazardous waste SANS signs and company trade name **(5 points)**	
8.3	Existence of a fully serviced fire extinguisher inside the vehicle **(Points 2)**	
TOTAL POINTS		**100**
MINIMUM THRESHOLD POINTS		**80**

Only bidders that have met the minimum threshold of 80 points out of 100 points for the Storage Facility will be considered for the next phase of the site visit evaluation.

GAUTENG PROVINCE
HEALTH
REPUBLIC OF SOUTH AFRICA

GT/GDH/050/2026 THE APPOINTMENT OF SERVICE PROVIDERS TO RENDER COMPREHENSIVE HEALTH CARE RISK WASTE MANAGEMENT SERVICES FOR THE GAUTENG DEPARTMENT OF HEALTH INSTITUTIONS FOR A PERIOD OF 36 MONTHS

Table 3: **Site Visit** evaluation criteria **[TREATMENT FACILITY]**

ITEM NO.	CRITERIA - [TREATMENT FACILITY]	POINTS
1.	**OHS REQUIREMENTS**	**11**
1.1	Heavy Duty Gloves **(1 point)**	
1.2	Overalls/ coverall **(1 point)**	
1.3	Safety Shoes **(1 point)**	
1.4	Goggles or Visors **(1 point)**	
1.5	N95 respirator **(1 point)**	
1.6	FFP3 (Filtering Face Piece) **(1 point)**	
1.7	Hard hat **(1 point)**	
1.8	First Aid kit with contents **(2 points)**	
1.9	Serviced Firefighting equipment (fire extinguisher or hose reel) **(2 points)**	
2.	**HYGIENE: Hygiene procedures and tools**	**10**
2.1	Hand wash facilities **(2 points)**	
2.2	Hand drying facilities **(2 points)**	
2.3	Running water (both hot and cold) **(2 points)**	
2.4	Pest control system available (bidder to avail proof of SLA / Contract) **(2 points)**	
2.5	Liquid Hand Soap **(2 points)**	
3.	**CHANGE ROOMS**	**10**
3.1	Ablution facilities with pictogram (signage) **(2 points)**	
3.2	Lockers **(2 points)**	
3.3	Showers **(2 points)**	
3.4	Hand wash facilities **(2 points)**	
3.5	Hand drying facilities **(2 points)**	
4.	**STORAGE AREA FOR HCRW**	**5**
4.1	Storage area available for HCRW **(1 point)**	
4.2	SANS10248 compliant HCRW signage available **(1 point)**	
4.3	A drainage system available in the storage area **(1 point)**	
4.4	Spill kit with complete contents available **(1 point)**	
4.5	Existence of spillage procedure document in place **(1 point)**	
5.	**CONTINGENCY PLAN STORAGE AREA FOR HCRW**	**6**
5.1	Storage area available for HCRW **(1 point)**	
5.2	SANS10248 compliant HCRW signage available **(1 point)**	
5.3	A drainage system available in the storage area **(1 point)**	
5.4	Spill kit with contents available **(1 point)**	
5.5	Existence of spillage procedure document in place **(1 point)**	
5.6	Provide attendance registers as proof of training for waste handlers on spillage procedures **(1 point)**	

GAUTENG PROVINCE
HEALTH
REPUBLIC OF SOUTH AFRICA

GT/GDH/050/2026 THE APPOINTMENT OF SERVICE PROVIDERS TO RENDER COMPREHENSIVE HEALTH CARE RISK WASTE MANAGEMENT SERVICES FOR THE GAUTENG DEPARTMENT OF HEALTH INSTITUTIONS FOR A PERIOD OF 36 MONTHS

ITEM NO.	CRITERIA - [TREATMENT FACILITY]	POINTS
6.	**RECEIVED WASTE**	**5**
6.1	HCRW destructed within 72 hours (Demonstrate process, provide procedures / documentation including manifest and destruction certificate) **(5 points)**	
7.	**TRANSPORTERS**	**12**
7.1	HCRW collection vehicle/s equipped with spill kits with contents **(5 points)**	
7.2	HCRW vehicle/s clearly marked with the biohazardous waste SANS signs and company trade name **(5 points)**	
7.3	Existence of a fully serviced fire extinguisher inside the vehicle **(Points 2)**	
8.	**TREATMENT TECHNOLOGY**	**5**
8.1	Maintenance plan available for all machines treating HCRW (incinerators and autoclaves) **(5 points)**	
9.	**DISPOSAL SITE/S**	**5**
9.1	Existence of an approved disposal sites with permits/licences **(5 points)**	
TOTAL POINTS		**69**
MINIMUM THRESHOLD POINTS		**55**

The bids will be declared non-responsive and disqualified, if they do not meet the minimum threshold points of 55 points out of 69 points for the site evaluation.

STAGE 2: PREFERENCE POINTS SYSTEM EVALUATION

Only bidders who have complied with all of the previous stages of evaluation will be considered for the Preference Point System evaluation. The evaluation shall be conducted by the BEC as follows:

a. The 90/10 preference point system will be applied, as per the Preferential Procurement Regulation, 2022.

b. To **claim points for Price** bidders are required to submit the following:

i. SBD 3.3 Price Schedule (Professional Services)
ii. Pricing Schedules for the BOQ Divided According to categories:
- Annexure A1: Johannesburg District Pricing Schedule
- Annexure A2: West Rand District Pricing Schedule
- Annexure A3: Ekurhuleni District Pricing Schedule
- Annexure A4: Sedibeng District Pricing Schedule
- Annexure A5: Tshwane District Pricing Schedule

c. Price Schedule Completion

The bidders must complete the Price Schedule as follows:

i. Bidders are allowed to bid for any or all of the five (5) identified districts.
ii. Bidder must complete the appropriate Excel Pricing Schedule Annexure based on their selected district and submit a printout (hard copy) of their pricing schedule together with their bid proposal.
iii. Bidder must also submit their selected and completed Excel Pricing Schedule Annexure electronically, which must be saved and submitted on USB to ensure document security. The USB must be clearly marked with the Company Name and tender number.
iv. Bidder must complete and submit the SECTION 2 PRICE (SBD 3.3: Price Schedule – Professional Services). Bidder must ensure that their price agrees to their Pricing Schedule Annexure.
v. Bidder must ensure that there are no discrepancies between the electronic (soft copy) version saved on USB and the hard copy submission of the Pricing Schedule. If any discrepancies are detected, the hard copy document will take precedence over the electronic copy. The Gauteng Department of Health may contact the bidder, but shall not be obliged to do so, for clarification regarding any discrepancies found.
Note to Bidder. Quantities may vary depending on need per institution.
vi. Each bid proposal with the USB must be submitted in one, sealed envelope to Gauteng Department of Health, Tender Box before the closing date and time. The name and address of the bidder, the bid number and the closing date must be clearly endorsed on the sealed envelope.

d. To **claim points for Specific Goals**, bidders are required to complete and submit SBD 6.1. together with the supporting documents as stated on the table below:

Table 4: Specific goals with required supporting documents

SPECIFIC GOALS REQUIREMENTS	SPECIFIC GOALS POINTS	DOCUMENTARY PROOF
The promotion of South African owned enterprises	5	Municipal account / sworn affidavit / Lease agreement – must be in the name of the enterprise /director(s)/ Owner. NB: Municipal account must not be older than 3 months
Enterprise which is at least 51% owned by HDIs	5	Copy of the bidder's latest CSD Registration Report or a copy of a valid B-BBEE Certificate/ valid Sworn Affidavit (for EME/QSE)
TOTAL POINTS FOR SPECIFIC GOALS	**10**	



GAUTENG PROVINCE
HEALTH
REPUBLIC OF SOUTH AFRICA

NB: Failure by the bidder to complete SBD 6.1. (to claim points) and submit proof or documentation required in terms of this tender, will forfeit preference points claim for specific goals.

2. SPECIAL CONDITIONS

2.1. Format of the Bid Document

All potential service providers shall comply with this contract specification. This contract specification shall apply to all HCFs within the departments **five (5) districts** as indicated in the list of health care facilities and the pricing schedule. **Bidders must bid per district** for the rendering of HCRW management services at a fixed and itemised price.
The award of the contracts will ultimately represent the following 5 districts:

(i) Johannesburg Health District;
(ii) West Rand Health District;
(iii) Ekurhuleni Health District;
(iv) Sedibeng Health District and
(v) **Tshwane Health District**.

All documents that form part of the contract are to be taken as mutually explanatory of one another and in the event of there being any ambiguity in or discrepancy between the various documents, the documents will take precedence in the following order:

a. Legislative or statutory framework requirements;
b. Contract specifications and annexures;
c. General conditions of contract;
d. Service level agreement.

2.2. Highly recommended briefing session

The bidders are requested to attend a highly recommended briefing session to address and clarify any misunderstanding or ambiguity prior to the proposal submission on the closing date.
The bidders must sign the Briefing Session Attendance Register. Minutes of all proceedings during the highly recommended briefing session shall be recorded.

2.3. Cession

Neither party shall have the right to cede any of its rights or delegate any of its obligations in terms of this contract to another person or organisation without the prior written approval of the other party.

2.4. Use of fluid correcting substances

The use of any corrective fluid/tape is strictly prohibited and will result in the disqualification of the bidder from the evaluation process.

2.5. Right and obligation

a. The schedule of rates and quantities must be read in conjunction with the conditions of the contract, special conditions of contract and SLA, contract specifications and annexures and all other data included in these documents for the full intent and meaning of each clause or item.
b. Bidders are advised to check the number of pages and, should any be found to be missing or in duplicate or the figures or writing indistinct or this schedule of rates and quantities contains any obvious errors, the bidder must inform the Department at once and have it rectified. No liability whatsoever will be admitted in respect of errors due to the foregoing.
c. The interested bidders shall be deemed to have read the contents and studied the drawings, specifications and details of services required and work to be done within the scheduled time frames and have acquainted themselves with the general conditions in the department health facilities.
d. Should there be any uncertainty doubt or obscurity as to the meaning of any item, the bidder must obtain an explanation of it, in writing, from the Department or its representative. No claims for extras arising from any such doubt or obscurity will be admitted after submission of the pricing schedule.
e. The bidder is advised to carefully read the conditions of contract, special conditions of contract, contract specifications and annexures in so far as they apply to items in the schedule of rates and quantities. Descriptions of activities described in the schedule of rates and quantities are abbreviated.
f. No claim whatsoever will be allowed in respect of errors in pricing due to abbreviation of the description of items which are fully described when read in conjunction with the relevant specification.
g. The bidder is hereby advised that the quantities provided in the rates and quantities are monthly estimates and the total contract amount is determined by multiplying the total monthly cost for each district by the number of months for which the contract will be awarded. This is compulsory and if not complete will lead to disqualification of the bid.
h. Furthermore, the estimated quantities provided in the schedule of rates and quantities are estimated monthly quantities derived from information provided by the previous contracted service providers over the previous contract period and are provided for information, and the actual monthly quantities (whether in excess or short of the estimated quantity) will be determined by the end of each month in accordance with the HCRW recordings made throughout the month.
i. It is deemed that provision for head office overheads, disposable stores, profit, maintenance costs etc., as well as all labour, material and equipment costs, is made in the priced items of the estimated schedule.

GAUTENG PROVINCE
HEALTH
REPUBLIC OF SOUTH AFRICA

GT/GDH/050/2026 THE APPOINTMENT OF SERVICE PROVIDERS TO RENDER COMPREHENSIVE HEALTH CARE RISK WASTE MANAGEMENT SERVICES FOR THE GAUTENG DEPARTMENT OF HEALTH INSTITUTIONS FOR A PERIOD OF 36 MONTHS

j. Bidders are referred to the contract specification in which further information in respect of certain scheduled items can be obtained. This is meant as an aid to bidders but does not imply that the specifications or clauses referred to are the only sources of information in respect of these items and further information and explanations may be found elsewhere in the contract documents and in the annexures.
k. The sum and unit prices to be inserted in the schedule of rates and quantities are to be the fully inclusive of value of goods/services described under the several items, including all costs and expenses which may be required in and for the execution of the goods/services described, together with all general risks, liabilities and obligations set forth or implied in the documents on which the contract is based.
l. All unit prices shall be quoted nett and be inclusive of value added tax (VAT).
m. A sum or unit price is to be entered against each item in the schedule of rates and quantities, whether quantities are stated or not. Items for which no price is entered will be considered as covered by other prices or rates in the schedule.
n. In cases where schedule rates are too high, such rates may be of sufficient importance to warrant rejection of a potential service provider.
o. All prices shall be quoted in the currency of the Republic of South Africa and will be subject to adjustment as specified in the specification. Such claims will be subject to submission of documentary proof in support of the claim.
p. For evaluation purposes, the following will be considered in the ratios indicated as part of the final award:
    - Other issues such as “additional work, materials supplied, extent of work, all issues of VAT, rates, analysis, site clearance after end of contract, all details about containers”, etc.
    - One set of schedules of rates and quantities are provided for fixed and itemised costs for each of the 5 districts for the 36-month period with the option for an annual price revision.
q. All unit prices, extensions and totals must be entered in the schedule electronically. This document must be completed electronically and then printed. This is then the hard copy. A hard copy as well as an electronic copy on USB must be submitted. In the event of any discrepancy between the hard copy and the electronic copy, the hard copy will take precedence.
r. All forms for costs must be completed for each section and each district. All columns and the average cost as quoted must be completed.
s. No part of the schedules contained in this document may be altered in any way. No unit expressed may be changed by the bidder.
t. If disposal certificates/destruction certificates are not attached to invoices, no payment will be authorised.
u. The scores allocated during the evaluation stage of the bid submission, will be based on a fixed and itemised price structure of the contract.



GAUTENG PROVINCE
HEALTH
REPUBLIC OF SOUTH AFRICA

2.6. Product Adherence and/or Equipment Change

a. In the event where a bidder offers a specific product and/or equipment against a product and the product is subsequently awarded to the bidder, it is required of the successful bidder to continue to supply the brand awarded throughout the transversal contract period.
b. In the event that the product and/or equipment is discontinued and/or replaced with a new product/equipment, Gauteng Department of Health Contract Management must be notified of such an occurrence and upon approval, an official amendment will be issued. The Supplier is required to submit supporting documents from the manufacturer substantiating the changes.
c. It must be noted that the new products/ equipment will be required to undergo the evaluation process prior to receiving approval by Gauteng Department of Health.
d. The new product/equipment offered must adhere to the technical specification for the product. The quality of the product must not be lower than the initially awarded product.
e. Furthermore, Suppliers are to take note that the price of the new product/equipment should not be higher from the current contract price of the original product.
f. Suppliers are not allowed to deliver a new product/equipment other than the awarded to the supplier prior to an approval of brand change from the Gauteng Department of Health.
g. In the case where the bidder requires to change the source of supply, the bidder must inform the department in writing.
    i. The Gauteng department of Health reserves the right to conduct site visit and evaluate the bidder's new source of supply and implement the criteria as stated on ToR.
    ii. The Gauteng department of health reserves the right to accept or reject the change in the source of supply.

2.7. Conditions of the bid award

a. Bidder must provide a certified copy of manufacturers license or wholesalers license from SAHPRA in the name of the manufacturer or wholesaler prior to award or a letter of intent proving that the bidder has agreement with the manufacturer or wholesaler. The SAHPRA license will provide the list of items authorized to distribute.
b. The Gauteng Department of Health reserves the right not to award or to cancel this tender at any time and shall not be bound to accept the lowest or any bid.
c. The Gauteng Department of Health reserves the right to award the bid to multiple bidders.
d. Awarding of the services will be done in terms of mitigating risk and where value proposition will be derived for the offered products.
e. The Gauteng Department of Health reserves the right to extend and include additional facilities (new facilities, extension of facilities, and relocation of premises). The same quoted rates shall apply to the additional facilities thereof.
f. The Gauteng Department of Health reserves the right to negotiate further with preferred bidders, where prices are above the market prices.
g. Bidders are required to register on the National Treasury Central Supplier Database prior to award.
h. Bidders must be tax compliant prior to award.



GAUTENG PROVINCE
HEALTH
REPUBLIC OF SOUTH AFRICA

i. Bidders must submit letter of good standing prior to award.

2.8. Process for rendering HCRW on new/additional facilities

a. The service provider shall be formally notified in writing of any newly added facilities to ensure continuity of HCRW services.
b. The Head of the District shall notify the service provider in writing of the additional facilities requiring HCRW services. The relevant supporting evidence shall also be submitted to the Departmental Representative (DR) at Central Office for consolidation.
c. The DR at Central Office shall consolidate the evidence received from the districts and submit it to Contract Management at Central Office for the necessary contractual amendments and inclusion of the new facilities in the contract.
d. Contract Management shall facilitate the updating of the contract to formally incorporate the newly added facilities.

2.9. Payment Terms

Section 38 (1) (f) of the PFMA and Treasury Regulation 8.2.3 regulates the payment to suppliers within 30 days of invoice receipt. In support of this it is compulsory for the successful bidder/s, on award, to register for GPT Electronic Invoice Submission and Tracking.

2.10.Price Adjustment Periods

a. Contract price adjustment shall be applied on an annual basis at the anniversary of the transversal contract from commencement date as per the price schedule.

2.11. Lines of Communication and Reporting

The appointed Service Provider will be required to report to the designated DR located at the Facilities Unit, who will be introduced to the successful Service Provider on appointment.

2.12. Travel

The Gauteng Department of Health will not be liable for any other travel costs incurred by the bidder. Prices quoted must be furnished based on “rendered on site” at the Gauteng Department of Health Central Office.

2.13. Counter conditions

Bidders’ attention is drawn to the fact that amendments to any of the Bid Conditions or setting of counter conditions by bidders may result in the invalidation of such bids.

2.14. Fronting

a. The Gauteng Department of Health supports the spirit of broad based black economic empowerment and recognises that real empowerment can only be achieved through individuals and businesses conducting themselves in accordance with the Constitution and in an honest, fair, equitable, transparent and legally compliant manner. Against this background the National Treasury condemns any form of fronting.
b. The Gauteng Department of Health, in ensuring that bidders conduct themselves in an honest manner will, as part of the bid evaluation processes, conduct or initiate the necessary enquiries/investigations to determine the accuracy of the representation made in bid documents.
c. Should any of the fronting indicators as contained in the Guidelines on Complex Structures and Transactions and Fronting, issued by the Department of Trade and Industry, be established during such enquiry/investigation, the onus will be on the bidder / service provider to prove that fronting does not exist.
d. In line with Regulation 14 of the PPR, 202222, failure to do so within a period of 14 days from date of notification may invalidate the bid / contract and may also result in the restriction of the bidder/service provider to conduct business with the public sector for a period not exceeding ten years, in addition to any other remedies the National Treasury may have against the bidder/service provider concerned.

2.15. Contract period

The contract period shall be for a period of 36 months.

2.16. Period of validity

The period of validity is one hundred and twenty (120) days after the closing date.

2.17. Mergers, take overs and changes in supplier detail

a. Where a contracted supplier merges with or is taken over by another, the contracted supplier must inform the Department of Health in writing immediately (within 7 days) of relevant details.
b. The Department of Health reserves the right to agree to the transfer of contractual obligations to the new supplier under the prevailing conditions of contract or to cancel the contract.
c. A contracted supplier must inform the Department of Health within 7 days of any changes of address, name or banking details.

2.18. Third parties

a. Participating authorities will not make a payment to or consult regarding orders with a third party.
b. No third party is entitled to put an account on hold.



GAUTENG PROVINCE
HEALTH
REPUBLIC OF SOUTH AFRICA

2.19. Post award reporting

Historical Data:
All successful bidders may be required to submit historical value and volume reports via e-mail on a quarterly (3) monthly basis to:
Gauteng Department of Health, Directorate: Acquisition and Contract Management

2.20. Value Added Tax (VAT)

The service provider must be registered in terms of section 23(1) or 23(3) of the Value-Added Tax Act, 1991 (Act No. 89 of 1991). All bid prices must be inclusive of 15% Value-Added Tax (VAT).

2.21. Supplier performance management

The Gauteng Department of Health reserves the right to terminate a contract where there is poor services delivery and bridge of SLA.

2.22. Technical Enquiries

All technical queries must be emailed to:

Mr. Edgar Motha - Edgar.Motha@gauteng.gov.za
Ms R.R Samudzi - Rudo.Samudzi@gauteng.gov.za
MS T Kibi - Nomathemba.Kibi@gauteng.gov.za

GAUTENG PROVINCE
HEALTH
REPUBLIC OF SOUTH AFRICA

SERVICE DESCRIPTION

AGREEMENT ENTERED INTO BY AND BETWEEN THE GAUTENG PROVINCIAL GOVERNMENT IN ITS _____

AND HEREIN REPRESENTED BY _____ IN HIS / HER CAPACITY AS _____ AND AS SUCH DULY AUTHORISED ("THE END USER")

AND

_____ A COMPANY WITH LIMITED LIABILITY AND DULY INCORPORATED IN TERMS OF THE COMPANY LAWS OF THE REPUBLIC SOUTH AFRICA, WITH COMPANY REGISTRATION NO _____ AND PRINCIPAL PLACE OF BUSINESS AT _____ AND HEREIN REPRESENTED BY _____ IN HIS / HER CAPACITY AS _____ AND AS SUCH DULY AUTHORISED ("THE SUPPLIER").

AND WHEREAS

The Supplier is the preferred supplier for the supply, delivery, installation, commissioning and maintenance of office equipment and labour saving devices ("equipment") in terms of the contract.

AND WHEREAS

The End user is, from time to time, desirous of hiring from the supplier one or more equipment, and the Supplier is in turn desirous of renting such equipment to the End user

Service Level Agreement Template

Table of Contents

1. Definition and rules of interpretation…….. …..3 – 4

2. Duration and Termination……..5

3. Obligations of the Supplier……5

3.1 Delivery and Installation…… ……5

3.2 Maintenance …….. …..5 - 6

3.3 Product Support…… ….6

3.4 Training ……7

3.5 Indemnity and Insurance…….. …7

3.6 Subcontracting…… …8

3.7 Confidentiality…….. 8

4. Obligations of the End-User……8

5. Breach…… ...8 - 9

6. Payment …… .9 - 12

7. Notice and Domicilia……10

8. General ……10 - 11

8.1 Whole Agreement……..……11

8.2 No Variation……..11

8.3 Waiver……..……11

8.4 Severability……..…..11

8.5 Applicable Law……11

8.6 Jurisdiction……11

8.7 Survival……..….11

Service Level Agreement Template

1 **NOW THEREFORE THE PARTIES AGREE AS FOLLOWS:**

1.1 **Rules of interpretation**. In this Agreement:-

1.1.1 clause headings are for convenience and are not to be used in its interpretation;

1.1.2 unless the context indicates a contrary intention an expression which denotes:-

1.1.2.1 any gender shall include the other genders;

1.1.2.2 a natural person shall include a juristic person and vice versa;

1.1.2.3 the singular shall include the plural and vice versa; and

1.1.2.4 references to clauses, schedules, parts and sections are, unless otherwise provided, references to clauses, schedules, parts and sections of this Agreement.

1.2 **Meanings of expressions and words**. In this Agreement the following expressions and words have the meanings assigned to them below and derivative expressions and words will have a corresponding meaning: -

1.2.1 **Agreement** means this agreement read together with the General and Special Conditions of Contract of Contract GT/GDH/000/000 which form an integral part of this Agreement

1.2.2 **Copy Charges** means the consideration, where applicable, (or, as the context may require, part thereof) payable by the End-user to the Supplier for the maintenance to be provided by the Supplier in terms hereof, which is the amount payable for each black and white or colour copy (as the case may be) that is produced by the equipment at the rate as set out in Addendum 1 of this Agreement, and which is calculated by multiplying the total black and white or colour copies (as the case may be) so produced during a copy period by the charge payable for each black and white or colour copy (as the case may be) as stipulated in Addendum 1 of this Agreement.

1.2.3 ***Copy Period*** means a period of one calendar month, each month commencing on the 1st day of each month (except the first period, which will be the period from Commencement Date until the last day of that calendar month). Copy Period means the period during which copies are made, calculated by means of an opening and closing meter reading, on a monthly basis.

1.2.4 ***End-user*** means the government institution described on

Service Level Agreement Template

page one hereof.

1.2.5 ***Equipment*** means all or any, as the context may require, of the equipment which is/are or will be the subject matter of this Agreement and which are more fully described in Addendum 1 of this Agreement.

1.2.6 ***Initial Period*** means the period of 36 (thirty six) months from the Commencement Date.

1.2.7 ***Maintenance*** means the obligation assumed by the Supplier to maintain the relevant equipment in proper and efficient operating condition on the terms as set out herein and in accordance with the specifications applicable to the relevant equipment.

1.2.8 ***Rental*** means the consideration payable by the End-user to the Supplier for the use of the equipment in the amounts as stipulated in Addendum 1 of this Agreement.

1.2.9 ***Working day*** means days on which business is generally conducted, i.e. Saturdays, Sundays and official public holidays excluded.

1.2.10 **Commencement date** means the date on which the installation and commissioning of equipment is completed.

1.2.11 **Material *breach*** means an event that goes to the root of this agreement.

1.2.12 ***Month*** means calendar month.

1.2.14 ***Termination date*** means 36 months after the commencement date.

Service Level Agreement Template

2. DURATION AND TERMINATION

2.1 This agreement shall commence upon the commencement and shall endure for as an Adhoc purchase and automatically terminate on the termination date by effluxion of time, unless terminated earlier or extended in terms of the provisions of this contract;

2.2 This agreement, may at the sole discretion of the End user, be extended in writing for a maximum period of twenty four months on the same terms and conditions except for the rental which shall be reduced by 75% (seventy five percent) of the rental specified herein.

3. OBLIGATIONS OF THE SUPPLIER

3.1 DELIVERY AND INSTALLATION

3.1.1 The Supplier undertakes to:

3.1.1.1 deliver the equipment conforming exactly to the description of the equipment as specified in addendum 1 of this agreement;

3.1.1.2 deliver and install new and unused equipment at the location selected by the End-user;

3.1.1.3 ensure that the equipment is delivered and installed in good condition and working order;

3.2 MAINTENANCE

The Supplier undertakes to:

3.2.1 ensure that the equipment performs in accordance with the manufacturer's specifications;

3.2.2 keep and maintain the equipment rented by the End-user in good and proper condition and working order and in such manner that the End-user will have the use thereof in an efficient operating condition, and to take such reasonable preventative action as may be necessary or open to it in order to limit the incidence and frequency of breakdowns of equipment to a minimum.

3.2.3 for this purpose The Supplier shall ensure that a qualified technician responds promptly to any notification of the End user of a breakdown or malfunction of any equipment.
The response time on such notification shall be as follows:

3.2.4 forthwith provide temporary loan equipment to the End-user if the fault in the equipment cannot be repaired, or is not expected to be reasonably repaired, within the period as set out in of this Agreement.

Service level Agreement Template

3.2.5 the availability of an adequate number of qualified technicians and personnel on a full-time basis to perform the maintenance required under this Agreement;

3.2.6 to make available the services of a fully qualified technician from 08h30 to 16h30 each working day to carry out preventative maintenance on the equipment;

3.2.7 to supply the quantities of spare parts, toner, developer, fuser oil and other consumables necessary to keep the equipment in proper operating condition;

3.2.8 to make available of full coverage maintenance, including preventive maintenance, all service calls and replacement all defectives or worn parts including expandable parts, and all consumable supplies. Should the Supplier fail to provide any of the consumables, or repair or replace with an equivalent unit, any equipment as required, then the Rental Copy Charges for the relevant month in respect of such equipment shall be forfeited by the Supplier and accordingly the End-user shall not be required to pay such rental and copy charges. Should the Supplier not have remedied the failure within 10 (ten) working days of notice from the Enduser then the End-user shall be entitled on written notice to the Supplier to immediately terminate the Agreement in respect of the relevant equipment at no additional cost or penalty to the End-user and the Supplier shall be obliged to remove the relevant equipment listed in the Agreement at is sole cost and expense;

3.2.9 remove the equipment from location of the End-user on termination of this Agreement at no additional charge;

3.2.10 perform all the services in terms of this contract with due care skill, efficiency and diligence in accordance with the best professional practice;

3.3 **PRODUCT SUPPORT**

3.3.1 The Supplier will from time to time and to the extent that is reasonably necessary or required by the End-user for the proper utilisation of the equipment, provide advice and assistance to the End-user and to provide such reports and data relevant to the usage of the equipment as may reasonably be required by the End-user.

3.3.2 Without limiting the generality of its obligations under clause

3.3.1 The Supplier hereby authorises the End-user to install access key control devices on the relevant equipment and will provide all necessary assistance to ensure the proper integration of the access key control devices with the equipment. The Supplier shall also assist the End-user in the installation of any copy control devices and copy management devices on the equipment as may be reasonably required by the End-user.

3.3.3 Where The Supplier or any of its employees, agents or independent contractors (“Representatives”) accesses the premises of the End-

Service Level Agreement Template

user, under or pursuant to, the terms of this Agreement, The Supplier and its representatives shall abide by and comply with the safety, health and environmental policies and procedures and other lawful directions of the End-user.

3.4 TRAINING

3.4.1 On installation of the equipment, The Supplier shall provide adequate training to the personnel of the End-user at no additional charge.

3.4.2 Instruction manuals shall also be provided by the Supplier free of charge for all equipment rented in terms of this agreement. The instruction manuals shall contain, but not be limited to, the following information:

3.4.2.1 Defining the capabilities of the equipment (specification).
3.4.2.2 Describing the technical operations of the equipment.
3.4.2.3 Describing the use criteria of the equipment.

3.4.3 The Supplier shall also provide such further training may be required by the End User from time to time.

3.5 INDEMNITY AND INSURANCE

The Supplier hereby:

3.5.1 Undertakes, at its own expense, to indemnify, protect and defend the End User from and against all actions, claims, losses or damages arising from any negligent act or omission by the Supplier including but not limited to all damages or loss which may be payable or arise as a result of any claim or proceedings in respect of the death, injury to any person and the loss or damage to any property which may arise out of or in consequence of the execution of any obligations in terms of this agreement;

3.5.2 at its expense take out and keep in force in respect of the indemnity given by it in terms of this agreement a public liability insurance policy providing cover with a limit of not less than R 3 000 000-00 (three million rand) for any one occurrence of an insured peril in any year and unlimited as to cumulative amount in respect of more than one such occurrence in any year;

3.6 SUBCONTRACTING

It is recorded that:

3.6.1 The Supplier will be entitled to appoint suitably qualified subcontractors who satisfy the eligibility criteria applicable to the award of the contract to perform all or any of its obligations arising from this Agreement;

Service Level Agreement Template

3.6.2 No sub-contract can create contractual relations between any subcontractor and End- User;

3.6.3 The Supplier shall be responsible for all the acts, defaults and negligence of its subcontractors and their experts, agents or employees as if they were acts, defaults or negligence of the Supplier shall not be absolved from its responsibility from under this clause on the basis that such person was acting outside the scope of its engagement by The Supplier.

3.6.4 The Supplier will provide the End user with a list (regularly updated for the duration of this agreement) of all the subcontractors that it intends using to perform all or any of its functions in terms of this agreement.

3.7 **CONFIDENTIALITY**

3.7.1 The Supplier shall treat all documents and information received in connection with this agreement as private and confidential, and shall not, save in so far as may be necessary for the purposes of performance thereof, publish or disclose any particulars without the prior written consent of the End user.

4. **OBLIGATIONS OF THE END - USER**

4.1 The End - user undertakes to:

4.1.1 Use the equipment for the purpose that it is intended and in accordance with any reasonable manufacturers' instructions and user manual as to the use thereof;
4.1.2 Keep the equipment in its possession and custody and control at its premises in accordance with the same policies and procedures that the End user applies in respect of its own assets and equipment;
4.1.3 Advise the supplier prior to relocation equipment.
4.1.4 Allow the supplier or its representatives reasonable access to the inspection of the equipment on prior written notice;
4.1.5 Undertakes to ensure that the installation area, access ways, electrical supply and where relevant, the IT configuration of its premises and other equipment or any network are suitable for the installation, passage and electrical/or electronic connection of the equipment when it is delivered for installation and thereafter.

5. BREACH

5.1 Either party commits a breach of contract where it fails to discharge any of its obligations in terms of this agreement;

5.2 Should either party commit a material breach of this agreement ("the defaulting party") and fail to remedy such breach within ten (10) days of written demand from the other party ("the aggrieved party") then the aggrieved party may, in addition to any other rights and remedies that it may have, including the right to claim damages:-

5.2.1 Claim specific performance ;

Service Level Agreement Template

5.2.2 or Terminate this agreement, such termination to be effective immediately upon receipt by the defaulting party of written notice to that effect

5.3 In any case where the End – User is entitled to damages, then the End -user may claim such damages from the Supplier;

5.4 This agreement shall automatically and without notice terminate upon occurrence of the following events:

5.4.1 a receiver, liquidator or administrator is appointed over any of the property or assets of that the Supplier;

5.4.2 the Supplier makes any voluntary arrangement with its creditors by reason of financial difficulty or becomes subject to an administration order, or provisional or final liquidation or insolvency order;

5.4.3 the Supplier goes into liquidation or is declared insolvent; or

5.4.4 that the Supplier ceases, or threatens to cease, to carry on business.

6. PAYMENT

The End – User shall pay the Supplier:

6.1 the rental applicable to the contract at the time of signing this agreement which rental shall be fixed for the entire initial rental period of 36 months. In the event of the extension of the contract, the rental shall reduce by 75% of the original rental The first Rental Charge shall be paid after the Commencement Date of the Agreement, within 30 days of the date of the original copy of statement or tax invoice to the Enduser and shall thereafter be payable monthly in arrear within 30 days of the last day of the month in which The Supplier delivers an original copy of statement and tax invoice to the End-user.

6.2 Copy Charges, applicable on the contract at the time of signing this Agreement will apply and would thereafter be adjusted on the thirteenth month and twenty-fifth month of the contract period.

.

6.3 The first of the Copy Charges shall be paid within thirty (30) days in which the original copy of statement and tax invoice in respect thereof is rendered, and shall thereafter be payable monthly in arrears on the first day of the month following the month in respect whereof the Copy Charge has arisen or within 30 days of the last day of the month in which the original copy of statement and tax invoice is delivered to the End-user, whichever is the later.

6.4 Payment shall be paid by electronic means into bank account :
Name :
Bank :
Branch :
Account number :

6.5 No other charges other than those set out herein will be payable for any other service rendered unless specifically agreed to in writing by the parties

Service Level Agreement Template

7. NOTICES AND DOMICILIA

7.1 The parties select as their respective domicile citandi et executandi the following addresses:

7.1.1 End User
Physical address
Postal Address
Telephone No.
Fax No.
Email
Contact person

7.1.2 Supplier
Physical address
Postal Address
Telephone no
Fax No
Email
Contact person

Or such other address, telefax or telephone number as may be substituted by notice as herein required

7.2 Any notice addressed to a party at its physical or postal address shall be sent by prepaid registered post or delivered by hand or sent by telefax.

7.3 Any notice shall be deemed to have been given:

7.3.1 if posted 14 calendar days after the date of posting;

7.3.2 if hand delivered, on the day of the delivery; The parties may communicate by electronic means.

7.4.3 if sent by telefax, on the date and time of sending, which telefax, is evidenced by a fax confirmation print out.

8. GENERAL

8.1 ***Whole Agreement***. This Agreement constitutes the entire Agreement between the Parties in respect of the subject matter hereof and neither Party shall be bound by any undertakings, representations, warranties or promises not recorded in this Agreement.

8.2 ***No Variation***. This agreement together with General Conditions of Contract, Special Conditions of the contract and all Standard Bidding Documents constitutes the entire agreement between the parties. No variation or consensual cancellation of this Agreement and no addition to this Agreement shall be of any force or effect unless reduced to writing and signed by the Parties or their duly authorised representatives.

8.3 ***Waiver.*** No waiver of any of the terms and conditions of this Agreement will be binding or effectual for any purpose unless expressed in writing and signed by the Party hereto giving the same, and any such waiver will be

Service Level Agreement Template

effective only in the specific instance and for the purpose given. No failure or delay on the part of either Party hereto in exercising any right, power or privilege hereunder will operate as a waiver thereof, nor will any single or partial exercise of any right, power or privilege preclude any other or further exercise thereof or the exercise of any other right, power or privilege.

8.4 ***Severability.*** Should any of the terms and conditions of this Agreement be held to be invalid, unlawful or unenforceable, such terms and conditions will be severable from the remaining terms and conditions which will continue to be valid and enforceable. If any term or condition held to be invalid is capable of amendment to render it valid, the Parties agree to negotiate an amendment to remove the invalidity.

8.5 ***Applicable Law.*** This Agreement will be governed by and construed in accordance with the law of the Republic of South Africa and all disputes, actions and other matters relating thereto will be determined in accordance with such law.

8.6 ***Jurisdiction.*** The Parties hereto hereby consent and submit to the jurisdiction of such High Court of South Africa, in any dispute arising from or in connection with this Agreement.

8.7 ***Survival.*** Notwithstanding termination of this Agreement, any clause which, from the context, contemplates ongoing rights and obligations of the parties, shall survive such termination and continue to be of full force and effect.

SIGNED AT _____ ON THIS _____ DAY OF _____ 2023.

_____
END USER

WITNESSES

1. _____

2. _____

SIGNED AT _____ ON THIS _____ DAY OF _____ 2023.

_____
SUPPLIER

WITNESSES

1. _____

2. _____

Service Level Agreement Template

GAUTENG PROVINCE
TREASURY
REPUBLIC OF SOUTH AFRICA

Provincial Supply Chain Management

Financial Statements

Submission of Financial Statements

The latest financial statements for the last two years are required (except if it is a new or a dormant entity)

a) Financial statements must be signed by the auditor (in the case of companies) or the accounting officer (in the case of close corporations) the owner (in case of sole proprietors). Signatures must be on the accounting officer's / auditors report on the auditor's /accounting officer's letterhead.

b) Financial statements must be signed by the member/s (in the case of close corporations) or by the director/s (in the case of companies.)

c) In bids where consortia/joint ventures/sub-contractors and partnerships are involved, all bidders must submit their financial statements.

d) If it is a new or dormant entity an opening set of financial statements must be submitted. A letter from the auditor (in the case of companies) or the accounting officer (in the case of close corporations) stating that the entity has not yet traded must be submitted.

e) In cases where an entity has operated for a period less than a year the Management Accounts Report for the period in operation must be submitted signed accordingly as stated in paragraph (a) and (b) of this document.

f) In cases where the entity has operated for a period more than a year but less that two years, then the financial statement for the first year of operation signed accordingly as per paragraph (a) and (b) of this document must be submitted.

GAUTENG PROVINCIAL GOVERNMENT
REPUBLIC OF SOUTH AFRICA

GAUTENG ETHICS & ANTICORRUPTION

INTEGRITY PACT FOR BUSINESSES

GAUTENG PROVINCIAL GOVERNMENT
REPUBLIC OF SOUTH AFRICA

GAUTENG ETHICS & ANTI CORRUPTION

FIGHTING CORRUPTION, PROMOTING INTEGRITY

1. INTRODUCTION

This agreement is part of the tender document, which shall be signed and submitted along with the tender document. The Chief Executive Officer of the bidding company or his/her authorised representative shall sign the integrity pact. If the winning bidder has not signed this integrity pact during the submission of the bid, the tender/proposal shall be disqualified.

2. OBJECTIVES

Now, therefore, the Gauteng Provincial Government and the Bidder agree to enter into this pre-contract agreement, hereinafter referred to as an integrity pact, to avoid all forms of corruption by following a system that is fair, transparent, and free from any influence/unprejudiced dealings before, during and after the currency of the contract to be entered, with a view to:

2.1 Enable the Gauteng Provincial Government to obtain the desired contract at a reasonable and competitive price in conformity to the defined specifications of the works, goods and services; and

2.2 Enable bidders to abstain from bribing or any corrupt practice to secure the contract by assuring them that their competitors will refrain from bribing and other corrupt practices and the Gauteng Provincial Government will commit to preventing corruption, in any form by their officials by following transparent procedures.

3. GOVERNANCE

3.1 The integrity pact seeks to ensure that both parties comply with all applicable provincial, national, continental, and international laws and regulations regarding fair competition and anti-corruption.

4. ENVIRONMENT

4.1 The integrity pact requires that both parties comply with all applicable environmental, health, and safety regulations.

5. PROTECTION OF INFORMATION

5.1 The integrity pact seeks to ensure that both parties undertake to protect the confidentiality of information. Each party, when given access to confidential information as part of the business relationship should not share this information with anyone unless authorised.

6. REPUTATION

6.1 The Gauteng Provincial Government wants to work with bidders who are proud of their reputation for fair dealing and quality delivery.

6.2 The Gauteng Provincial Government wants to ensure that working with government is reputation enhancing for the supplier.

6.3 The Gauteng Provincial Government expects bidders/suppliers to be protective of government's reputation, and ensure that neither they, nor any of their partners or subcontractors, bring government to disrepute by engaging in any act or omission which is reasonably likely to diminish the trust that the public places in government.

6.4 The Gauteng Provincial Government further requires its bidders/suppliers to always adhere to ethical conduct even outside their contractual obligation with the Gauteng Provincial Government.

7. VALUES OF THE GAUTENG PROVINCIAL GOVERNMENT

7.1 The value system of the Gauteng City Region is shown below:

GAUTENG CITY REGION VALUES SYSTEM	
CORE VALUES	**ETHICAL VALUES**
Patriotism Purposefulness Team focused Integrity Accountability Passionate Activism	Integrity Accountability Dignity Transparency Respect Honesty

7.2 The Gauteng Provincial Government commits to ensure that the values system is embedded into the day-to-day operations of its institutions.

8. COMMITMENTS OF THE GAUTENG PROVINCIAL GOVERNMENT

The Gauteng Provincial Government commits itself to the following:

8.1 The GPG commits that its officials will at all times conduct themselves in accordance with Treasury Regulations 16A.8[1], copy of which is attached marked Annexure A, and that:

8.1.1 The GPG is committed to doing business with integrity and proper regard for ethical business practices.

8.1.2 The GPG hereby undertakes that no official of the GPG, connected directly or indirectly with the contract will demand, take a promise for or accept, directly or through

[1] Government Notice No. R. 225 of 2005 published under Government Gazette No. 27388 of 15 March 2005, as amended



GAUTENG
PROVINCIAL GOVERNMENT
REPUBLIC OF SOUTH AFRICA

GAUTENG ETHICS & ANTICORRUPTION

intermediaries, any bribe, consideration, gift, reward, favour, or any material or immaterial benefit or any other advantage from the bidder, either for themselves or for any person, organisation or third party related to the contract in exchange for an advantage in the bidding process, bid evaluation, contracting or implementation process related to the contract.

8.1.3 The GPG further confirms that its officials have not favoured any prospective bidder in any form that could afford an undue advantage to that bidder during the tendering stage and will further treat all bidders alike.

8.1.4 The GPG will during the tender process treat all Bidder(s) with equity.

8.1.5 All officials of the GPG shall report any attempted or completed violation of clauses to the following details:

	Gauteng Ethics Hotline	National Anti-Corruption Hotline
Toll-free number	080 1111 633	0800 701 701
SMS call-back	49017	N/A
E-mail	gpethics@behonest.co.za	nach@psc.gov.za
Fax	086 726 1681	0800 204 965
Website	www.thehotline.co.za	www.publicservicecorruptionhotline.org.za
Post	Chief Directorate: Integrity Management Private Bag X61 Marshalltown 2001	Public Service Commission Private X121 Pretoria 0001
Walk-in	Office of the Premier 55 Marshall Street Marshalltown Johannesburg 2001	Gauteng Provincial Office Public Service Commission Schreiner Chambers 6th Floor 94 Pritchard Street Johannesburg

8.1.6 Following the report on the violation of the above clauses by the official(s), through any source, the GPG shall investigate allegations of such violations against the official or other role players and when justified:

a) Take steps against such official and other role players (necessary disciplinary proceedings, and/or any other action as deemed fit, bar such officials from further dealings related to the contract process). In such a case, while an enquiry is being conducted by the Gauteng Provincial Government the proceedings under the contract would not be stalled.
b) Inform the relevant Treasury of steps taken in 8.1.5(a) against such officials; and
c) Report any conduct by such official and other role players that may constitute an offence to the South African Police Service.

9. COMMITMENTS OF THE BIDDERS

The bidder commits himself/herself to take all measures necessary to prevent corrupt practices, unfair means and illegal activities during any stage of his/her bid or during any pre-contract or post contract stage to secure the contract or in furtherance to secure it and commits himself/herself to the following:

9.1 The bidder is committed to doing business with integrity and proper regard for ethical business practices.

9.2 The bidder will not offer, directly or through intermediaries, any bribe, gift, consideration, reward, favour, any material or immaterial benefit or other advantage, commission, fees, brokerage or inducements to any official of the Gauteng Provincial Government, connected directly or indirectly with the bidding process, or to any person, organisation or third party related to the contract in exchange for any advantage in the bidding, evaluation, contracting and implementation of the contract.

9.3 The bidder further undertakes that he/she has not given, offered or promised to give, directly or indirectly any bribe, gift, consideration, reward, favour, any material or immaterial benefit or other advantage, commission, fees, brokerage or inducements to an official of the Gauteng Provincial Government or otherwise in procuring the contract or forbearing to do or having done any act in relation to the obtaining or execution of the contract or any other contract with the Gauteng Provincial Government for showing or forbearing to show favour or disfavor to any person in relation to the contract or any other contract with the Gauteng Provincial Government.

9.4 The bidder will not collude with other parties interested in the contract to preclude the competitive bid price, impair the transparency, fairness and progress of the bidding process, bid evaluation, contracting and implementation of the contract.

9.5 The Bidder(s)/Contractor(s) will not enter with other Bidders into any undisclosed agreement or understanding, whether formal or informal. This applies in particular to prices, specifications, certifications, subsidiary contracts, submission or non-submission of bids or any other actions to restrict competitiveness or to introduce cartelization in the bidding process.

9.6 The Bidder(s)/Contractor(s) will, when presenting his / her bid, disclose any and all payments he /she has made, is committed to or intends to make to agents, brokers or any other intermediaries in connection with the award of the contract.

9.7 In case of sub–contracting, the Principal Contractor shall take the responsibility of adoption of Integrity Pact by the Sub-Contractor.

9.8 The bidder shall report any attempted or completed violation of clauses 9.1 to 9.7 including any alleged unethical conduct to the Gauteng Ethics Hotline (details are provided at clause 8.1.4).

9.9 The bidder (or anyone acting on its behalf) warrants that:

9.9.1 It has not been convicted by a court of law for fraud and/or corruption with respect to the procurement/tendering processes; and/or

9.9.2 It has not been convicted by a court of law for theft or extortion; and/or

9.9.3 It is not listed on the National Treasury's database of Restricted Suppliers or Register of Tender Defaulters.

10. SANCTIONS FOR VIOLATION

10.1 The breach of any aforesaid provisions or providing false information by employers, including manipulation of information by evaluators, shall face administrative charges and penal actions as per the existing relevant rules and laws.

10.2 The breach of the Pact or providing false information by the Bidder, or anyone employed by him, or acting on his behalf (whether without the knowledge of the Bidder), or acting on his/her behalf, shall be dealt with as per the provisions of the Prevention and Combating of Corrupt Activities Act (12 of 2004).

10.3 The Gauteng Provincial Government shall also take all or any one of the following actions, wherever required:

10.3.1 To immediately call off the pre-contract negotiations without giving any compensation to the bidder. However, the proceedings with the other bidder(s) would continue.
10.3.2 To immediately cancel the contract, if already awarded/signed, without giving any compensation to the bidder.
10.3.3 To recover all sums already paid by the Gauteng Provincial Government.
10.3.4 To cancel all or any other contracts with the bidders and GPG shall be entitled to demand and recover from the Contractor liquidated damages of the Contract value.
10.3.5 To submit the details of the bidder to the National Treasury to register on the database for tender defaulters.

GAUTENG PROVINCIAL GOVERNMENT
REPUBLIC OF SOUTH AFRICA

GAUTENG ETHICS & ANTICORRUPTION

11 CONFLICT OF INTEREST

11.1 A conflict of interest involves a conflict between the public duty and private interest (for favor or vengeance) of a public official, in which the public official has private interest which could improperly influence the performance of their official duties and responsibilities. Conflicts of interest would arise in a situation when any concerned members of both parties are related either directly or indirectly or has any association or had any confrontation. Thus, conflict of interest of any tender committee must be declared in a prescribed form.

11.2 The bidder shall not lend or borrow any money from or enter any monetary dealings or transactions, directly or indirectly, with any member of the tender committee or officials of the Gauteng Provincial Government, and if he/she does so, the Gauteng Provincial Government shall be entitled forthwith to rescind the contract and all other contracts with the bidder.

12 LEGAL ACTIONS

12.1 The actions stipulated in this Integrity Pact are without prejudice to any other legal action that may follow in accordance with the provisions of the extant law in force relating to any civil or criminal proceedings.

13 VALIDITY

13.1 The validity of this Integrity Pact shall cover the tender process and extend until the completion of the contract to the satisfaction of both the Gauteng Provincial Government and the bidder (service provider).

13.2 Should one or several provisions of the Pact turn out to be invalid; the remainder of this Pact remains valid. In this case, the parties will strive to come to an agreement to their original intentions.

GPG INTEGRITY PACT FOR BUSINESSES

BIDDER/SUPPLIER/SERVICE PROVIDER	
Signature of the CEO	
Full name of the CEO	
Tender number	
Date	

Annexure A

GOVERNMENT PROCUREMENT

GENERAL CONDITIONS OF CONTRACT
July 2010

NOTES

The purpose of this document is to:

(i) Draw special attention to certain general conditions applicable to government bids, contracts and orders; and
(ii) To ensure that clients be familiar with regard to the rights and obligations of all parties involved in doing business with government.

In this document words in the singular also mean in the plural and vice versa and words in the masculine also mean in the feminine and neuter.

- The General Conditions of Contract will form part of all bid documents and may not be amended.

- Special Conditions of Contract (SCC) relevant to a specific bid, should be compiled separately for every bid (if (applicable) and will supplement the General Conditions of Contract. Whenever there is a conflict, the provisions in the SCC shall prevail.

TABLE OF CLAUSES

1. Definitions
2. Application
3. General
4. Standards
5. Use of contract documents and information; inspection
6. Patent rights
7. Performance security
8. Inspections, tests and analysis
9. Packing
10. Delivery and documents
11. Insurance
12. Transportation
13. Incidental services
14. Spare parts
15. Warranty
16. Payment
17. Prices
18. Contract amendments
19. Assignment
20. Subcontracts
21. Delays in the supplier’s performance
22. Penalties
23. Termination for default
24. Dumping and countervailing duties
25. Force Majeure
26. Termination for insolvency
27. Settlement of disputes
28. Limitation of liability
29. Governing language
30. Applicable law
31. Notices
32. Taxes and duties
33. National Industrial Participation Programme (NIPP)
34. Prohibition of restrictive practices

General Conditions of Contract

1. Definitions

1. The following terms shall be interpreted as indicated:

1.1 “Closing time” means the date and hour specified in the bidding documents for the receipt of bids.

1.2 “Contract” means the written agreement entered into between the purchaser and the supplier, as recorded in the contract form signed by the parties, including all attachments and appendices thereto and all documents incorporated by reference therein.

1.3 “Contract price” means the price payable to the supplier under the contract for the full and proper performance of his contractual obligations.

1.4 “Corrupt practice” means the offering, giving, receiving, or soliciting of any thing of value to influence the action of a public official in the procurement process or in contract execution.

1.5 "Countervailing duties" are imposed in cases where an enterprise abroad is subsidized by its government and encouraged to market its products internationally.

1.6 “Country of origin” means the place where the goods were mined, grown or produced or from which the services are supplied. Goods are produced when, through manufacturing, processing or substantial and major assembly of components, a commercially recognized new product results that is substantially different in basic characteristics or in purpose or utility from its components.

1.7 “Day” means calendar day.

1.8 “Delivery” means delivery in compliance of the conditions of the contract or order.

1.9 “Delivery ex stock” means immediate delivery directly from stock actually on hand.

1.10 “Delivery into consignees store or to his site” means delivered and unloaded in the specified store or depot or on the specified site in compliance with the conditions of the contract or order, the supplier bearing all risks and charges involved until the supplies are so delivered and a valid receipt is obtained.

1.11 "Dumping" occurs when a private enterprise abroad market its goods on own initiative in the RSA at lower prices than that of the country of origin and which have the potential to harm the local industries in the RSA.

1.12 ”Force majeure” means an event beyond the control of the supplier and not involving the supplier’s fault or negligence and not foreseeable. Such events may include, but is not restricted to, acts of the purchaser in its sovereign capacity, wars or revolutions, fires, floods, epidemics, quarantine restrictions and freight embargoes.

1.13 “Fraudulent practice” means a misrepresentation of facts in order to influence a procurement process or the execution of a contract to the detriment of any bidder, and includes collusive practice among bidders (prior to or after bid submission) designed to establish bid prices at artificial non-competitive levels and to deprive the bidder of the benefits of free and open competition.

1.14 “GCC” means the General Conditions of Contract.

1.15 “Goods” means all of the equipment, machinery, and/or other materials that the supplier is required to supply to the purchaser under the contract.

1.16 “Imported content” means that portion of the bidding price represented by the cost of components, parts or materials which have been or are still to be imported (whether by the supplier or his subcontractors) and which costs are inclusive of the costs abroad, plus freight and other direct importation costs such as landing costs, dock dues, import duty, sales duty or other similar tax or duty at the South African place of entry as well as transportation and handling charges to the factory in the Republic where the supplies covered by the bid will be manufactured.

1.17 “Local content” means that portion of the bidding price which is not included in the imported content provided that local manufacture does take place.

1.18 “Manufacture” means the production of products in a factory using labour, materials, components and machinery and includes other related value-adding activities.

1.19 “Order” means an official written order issued for the supply of goods or works or the rendering of a service.

1.20 “Project site,” where applicable, means the place indicated in bidding documents.

1.21 “Purchaser” means the organization purchasing the goods.

1.22 “Republic” means the Republic of South Africa.

1.23 “SCC” means the Special Conditions of Contract.

1.24 “Services” means those functional services ancillary to the supply of the goods, such as transportation and any other incidental services, such as installation, commissioning, provision of technical assistance, training, catering, gardening, security, maintenance and other such obligations of the supplier covered under the contract.

1.25 "Written" or "in writing" means handwritten in ink or any form of electronic or mechanical writing.

2. Application

2.1 These general conditions are applicable to all bids, contracts and orders including bids for functional and professional services, sales, hiring, letting and the granting or acquiring of rights, but excluding immovable property, unless otherwise indicated in the bidding documents.

2.2 Where applicable, special conditions of contract are also laid down to cover specific supplies, services or works.

2.3 Where such special conditions of contract are in conflict with these general conditions, the special conditions shall apply.

3. General

3.1 Unless otherwise indicated in the bidding documents, the purchaser shall not be liable for any expense incurred in the preparation and submission of a bid. Where applicable a non-refundable fee for documents may be charged.

3.2 With certain exceptions, invitations to bid are only published in the Government Tender Bulletin. The Government Tender Bulletin may be obtained directly from the Government Printer, Private Bag X85, Pretoria 0001, or accessed electronically from www.treasury.gov.za

4. Standards

4.1 The goods supplied shall conform to the standards mentioned in the bidding documents and specifications.

5. Use of contract documents and information; inspection.

5.1 The supplier shall not, without the purchaser's prior written consent, disclose the contract, or any provision thereof, or any specification, plan, drawing, pattern, sample, or information furnished by or on behalf of the purchaser in connection therewith, to any person other than a person employed by the supplier in the performance of the contract. Disclosure to any such employed person shall be made in confidence and shall extend only so far as may be necessary for purposes of such performance.

5.2 The supplier shall not, without the purchaser's prior written consent, make use of any document or information mentioned in GCC clause 5.1 except for purposes of performing the contract.

5.3 Any document, other than the contract itself mentioned in GCC clause 5.1 shall remain the property of the purchaser and shall be returned (all copies) to the purchaser on completion of the supplier's performance under the contract if so required by the purchaser.

5.4 The supplier shall permit the purchaser to inspect the supplier's records relating to the performance of the supplier and to have them audited by auditors appointed by the purchaser, if so required by the purchaser.

6. Patent rights

6.1 The supplier shall indemnify the purchaser against all third-party claims of infringement of patent, trademark, or industrial design rights arising from use of the goods or any part thereof by the purchaser.

7. Performance

7.1 Within thirty (30) days of receipt of the notification of contract award,

security

the successful bidder shall furnish to the purchaser the performance security of the amount specified in SCC.

7.2 The proceeds of the performance security shall be payable to the purchaser as compensation for any loss resulting from the supplier's failure to complete his obligations under the contract.

7.3 The performance security shall be denominated in the currency of the contract, or in a freely convertible currency acceptable to the purchaser and shall be in one of the following forms:

(a) a bank guarantee or an irrevocable letter of credit issued by a reputable bank located in the purchaser's country or abroad, acceptable to the purchaser, in the form provided in the bidding documents or another form acceptable to the purchaser; or
(b) a cashier's or certified cheque

7.4 The performance security will be discharged by the purchaser and returned to the supplier not later than thirty (30) days following the date of completion of the supplier's performance obligations under the contract, including any warranty obligations, unless otherwise specified in SCC.

8. Inspections, tests and analyses

8.1 All pre-bidding testing will be for the account of the bidder.

8.2 If it is a bid condition that supplies to be produced or services to be rendered should at any stage during production or execution or on completion be subject to inspection, the premises of the bidder or contractor shall be open, at all reasonable hours, for inspection by a representative of the Department or an organization acting on behalf of the Department.

8.3 If there are no inspection requirements indicated in the bidding documents and no mention is made in the contract, but during the contract period it is decided that inspections shall be carried out, the purchaser shall itself make the necessary arrangements, including payment arrangements with the testing authority concerned.

8.4 If the inspections, tests and analyses referred to in clauses 8.2 and 8.3 show the supplies to be in accordance with the contract requirements, the cost of the inspections, tests and analyses shall be defrayed by the purchaser.

8.5 Where the supplies or services referred to in clauses 8.2 and 8.3 do not comply with the contract requirements, irrespective of whether such supplies or services are accepted or not, the cost in connection with these inspections, tests or analyses shall be defrayed by the supplier.

8.6 Supplies and services which are referred to in clauses 8.2 and 8.3 and which do not comply with the contract requirements may be rejected.

8.7 Any contract supplies may on or after delivery be inspected, tested or analyzed and may be rejected if found not to comply with the requirements of the contract. Such rejected supplies shall be held at the

cost and risk of the supplier who shall, when called upon, remove them immediately at his own cost and forthwith substitute them with supplies which do comply with the requirements of the contract. Failing such removal the rejected supplies shall be returned at the suppliers cost and risk. Should the supplier fail to provide the substitute supplies forthwith, the purchaser may, without giving the supplier further opportunity to substitute the rejected supplies, purchase such supplies as may be necessary at the expense of the supplier.

8.8 The provisions of clauses 8.4 to 8.7 shall not prejudice the right of the purchaser to cancel the contract on account of a breach of the conditions thereof, or to act in terms of Clause 23 of GCC.

9. Packing

9.1 The supplier shall provide such packing of the goods as is required to prevent their damage or deterioration during transit to their final destination, as indicated in the contract. The packing shall be sufficient to withstand, without limitation, rough handling during transit and exposure to extreme temperatures, salt and precipitation during transit, and open storage. Packing, case size and weights shall take into consideration, where appropriate, the remoteness of the goods' final destination and the absence of heavy handling facilities at all points in transit.

9.2 The packing, marking, and documentation within and outside the packages shall comply strictly with such special requirements as shall be expressly provided for in the contract, including additional requirements, if any, specified in SCC, and in any subsequent instructions ordered by the purchaser.

10. Delivery and documents

10.1 Delivery of the goods shall be made by the supplier in accordance with the terms specified in the contract. The details of shipping and/or other documents to be furnished by the supplier are specified in SCC.

10.2 Documents to be submitted by the supplier are specified in SCC.

11. Insurance

11.1 The goods supplied under the contract shall be fully insured in a freely convertible currency against loss or damage incidental to manufacture or acquisition, transportation, storage and delivery in the manner specified in the SCC.

12. Transportation

12.1 Should a price other than an all-inclusive delivered price be required, this shall be specified in the SCC.

13. Incidental services

13.1 The supplier may be required to provide any or all of the following services, including additional services, if any, specified in SCC:

(a) performance or supervision of on-site assembly and/or commissioning of the supplied goods;
(b) furnishing of tools required for assembly and/or maintenance of the supplied goods;
(c) furnishing of a detailed operations and maintenance manual for each appropriate unit of the supplied goods;
(d) performance or supervision or maintenance and/or repair of the supplied goods, for a period of time agreed by the parties,

provided that this service shall not relieve the supplier of any warranty obligations under this contract; and

(e) training of the purchaser's personnel, at the supplier's plant and/or on-site, in assembly, start-up, operation, maintenance, and/or repair of the supplied goods.

13.2 Prices charged by the supplier for incidental services, if not included in the contract price for the goods, shall be agreed upon in advance by the parties and shall not exceed the prevailing rates charged to other parties by the supplier for similar services.

14. Spare parts

14.1 As specified in SCC, the supplier may be required to provide any or all of the following materials, notifications, and information pertaining to spare parts manufactured or distributed by the supplier:

(a) such spare parts as the purchaser may elect to purchase from the supplier, provided that this election shall not relieve the supplier of any warranty obligations under the contract; and

(b) in the event of termination of production of the spare parts:

(i) Advance notification to the purchaser of the pending termination, in sufficient time to permit the purchaser to procure needed requirements; and

(ii) following such termination, furnishing at no cost to the purchaser, the blueprints, drawings, and specifications of the spare parts, if requested.

15. Warranty

15.1 The supplier warrants that the goods supplied under the contract are new, unused, of the most recent or current models, and that they incorporate all recent improvements in design and materials unless provided otherwise in the contract. The supplier further warrants that all goods supplied under this contract shall have no defect, arising from design, materials, or workmanship (except when the design and/or material is required by the purchaser's specifications) or from any act or omission of the supplier, that may develop under normal use of the supplied goods in the conditions prevailing in the country of final destination.

15.2 This warranty shall remain valid for twelve (12) months after the goods, or any portion thereof as the case may be, have been delivered to and accepted at the final destination indicated in the contract, or for eighteen (18) months after the date of shipment from the port or place of loading in the source country, whichever period concludes earlier, unless specified otherwise in SCC.

15.3 The purchaser shall promptly notify the supplier in writing of any claims arising under this warranty.

15.4 Upon receipt of such notice, the supplier shall, within the period specified in SCC and with all reasonable speed, repair or replace the defective goods or parts thereof, without costs to the purchaser.

15.5 If the supplier, having been notified, fails to remedy the defect(s) within the period specified in SCC, the purchaser may proceed to take such remedial action as may be necessary, at the supplier's risk and expense and without prejudice to any other rights which the purchaser

may have against the supplier under the contract.

16. Payment

16.1 The method and conditions of payment to be made to the supplier under this contract shall be specified in SCC.

16.2 The supplier shall furnish the purchaser with an invoice accompanied by a copy of the delivery note and upon fulfillment of other obligations stipulated in the contract.

16.3 Payments shall be made promptly by the purchaser, but in no case later than thirty (30) days after submission of an invoice or claim by the supplier.

16.4 Payment will be made in Rand unless otherwise stipulated in SCC.

17. Prices

17.1 Prices charged by the supplier for goods delivered and services performed under the contract shall not vary from the prices quoted by the supplier in his bid, with the exception of any price adjustments authorized in SCC or in the purchaser's request for bid validity extension, as the case may be.

18. Contract amendments

18.1 No variation in or modification of the terms of the contract shall be made except by written amendment signed by the parties concerned.

19. Assignment

19.1 The supplier shall not assign, in whole or in part, its obligations to perform under the contract, except with the purchaser's prior written consent.

20. Subcontracts

20.1 The supplier shall notify the purchaser in writing of all subcontracts awarded under this contracts if not already specified in the bid. Such notification, in the original bid or later, shall not relieve the supplier from any liability or obligation under the contract.

21. Delays in the supplier's performance

21.1 Delivery of the goods and performance of services shall be made by the supplier in accordance with the time schedule prescribed by the purchaser in the contract.

21.2 If at any time during performance of the contract, the supplier or its subcontractor(s) should encounter conditions impeding timely delivery of the goods and performance of services, the supplier shall promptly notify the purchaser in writing of the fact of the delay, its likely duration and its cause(s). As soon as practicable after receipt of the supplier's notice, the purchaser shall evaluate the situation and may at his discretion extend the supplier's time for performance, with or without the imposition of penalties, in which case the extension shall be ratified by the parties by amendment of contract.

21.3 No provision in a contract shall be deemed to prohibit the obtaining of supplies or services from a national department, provincial department, or a local authority.

21.4 The right is reserved to procure outside of the contract small quantities or to have minor essential services executed if an emergency arises, the supplier's point of supply is not situated at or near the place where the supplies are required, or the supplier's services are not readily

available.

21.5 Except as provided under GCC Clause 25, a delay by the supplier in the performance of its delivery obligations shall render the supplier liable to the imposition of penalties, pursuant to GCC Clause 22, unless an extension of time is agreed upon pursuant to GCC Clause 21.2 without the application of penalties.

21.6 Upon any delay beyond the delivery period in the case of a supplies contract, the purchaser shall, without canceling the contract, be entitled to purchase supplies of a similar quality and up to the same quantity in substitution of the goods not supplied in conformity with the contract and to return any goods delivered later at the supplier's expense and risk, or to cancel the contract and buy such goods as may be required to complete the contract and without prejudice to his other rights, be entitled to claim damages from the supplier.

22. Penalties

22.1 Subject to GCC Clause 25, if the supplier fails to deliver any or all of the goods or to perform the services within the period(s) specified in the contract, the purchaser shall, without prejudice to its other remedies under the contract, deduct from the contract price, as a penalty, a sum calculated on the delivered price of the delayed goods or unperformed services using the current prime interest rate calculated for each day of the delay until actual delivery or performance. The purchaser may also consider termination of the contract pursuant to GCC Clause 23.

23. Termination for default

23.1 The purchaser, without prejudice to any other remedy for breach of contract, by written notice of default sent to the supplier, may terminate this contract in whole or in part:

(a) if the supplier fails to deliver any or all of the goods within the period(s) specified in the contract, or within any extension thereof granted by the purchaser pursuant to GCC Clause 21.2;

(b) if the Supplier fails to perform any other obligation(s) under the contract; or

(c) if the supplier, in the judgment of the purchaser, has engaged in corrupt or fraudulent practices in competing for or in executing the contract.

23.2 In the event the purchaser terminates the contract in whole or in part, the purchaser may procure, upon such terms and in such manner as it deems appropriate, goods, works or services similar to those undelivered, and the supplier shall be liable to the purchaser for any excess costs for such similar goods, works or services. However, the supplier shall continue performance of the contract to the extent not terminated.

23.3 Where the purchaser terminates the contract in whole or in part, the purchaser may decide to impose a restriction penalty on the supplier by prohibiting such supplier from doing business with the public sector for a period not exceeding 10 years.

23.4 If a purchaser intends imposing a restriction on a supplier or any person associated with the supplier, the supplier will be allowed a time period of not more than fourteen (14) days to provide reasons why the

envisaged restriction should not be imposed. Should the supplier fail to respond within the stipulated fourteen (14) days the purchaser may regard the intended penalty as not objected against and may impose it on the supplier.

23.5 Any restriction imposed on any person by the Accounting Officer / Authority will, at the discretion of the Accounting Officer / Authority, also be applicable to any other enterprise or any partner, manager, director or other person who wholly or partly exercises or exercised or may exercise control over the enterprise of the first-mentioned person, and with which enterprise or person the first-mentioned person, is or was in the opinion of the Accounting Officer / Authority actively associated.

23.6 If a restriction is imposed, the purchaser must, within five (5) working days of such imposition, furnish the National Treasury, with the following information:

(i) the name and address of the supplier and / or person restricted by the purchaser;
(ii) the date of commencement of the restriction
(iii) the period of restriction; and
(iv) the reasons for the restriction.

These details will be loaded in the National Treasury's central database of suppliers or persons prohibited from doing business with the public sector.

23.7 If a court of law convicts a person of an offence as contemplated in sections 12 or 13 of the Prevention and Combating of Corrupt Activities Act, No. 12 of 2004, the court may also rule that such person's name be endorsed on the Register for Tender Defaulters. When a person's name has been endorsed on the Register, the person will be prohibited from doing business with the public sector for a period not less than five years and not more than 10 years. The National Treasury is empowered to determine the period of restriction and each case will be dealt with on its own merits. According to section 32 of the Act the Register must be open to the public. The Register can be perused on the National Treasury website.

24. Anti-dumping and countervailing duties and rights

24.1 When, after the date of bid, provisional payments are required, or anti-dumping or countervailing duties are imposed, or the amount of a provisional payment or anti-dumping or countervailing right is increased in respect of any dumped or subsidized import, the State is not liable for any amount so required or imposed, or for the amount of any such increase. When, after the said date, such a provisional payment is no longer required or any such anti-dumping or countervailing right is abolished, or where the amount of such provisional payment or any such right is reduced, any such favourable difference shall on demand be paid forthwith by the contractor to the State or the State may deduct such amounts from moneys (if any) which may otherwise be due to the contractor in regard to supplies or services which he delivered or rendered, or is to deliver or render in terms of the contract or any other contract or any other amount which may be due to him

25. Force Majeure

25.1 Notwithstanding the provisions of GCC Clauses 22 and 23, the supplier shall not be liable for forfeiture of its performance security, damages, or termination for default if and to the extent that his delay in performance or other failure to perform his obligations under the contract is the result of an event of force majeure.

25.2 If a force majeure situation arises, the supplier shall promptly notify the purchaser in writing of such condition and the cause thereof. Unless otherwise directed by the purchaser in writing, the supplier shall continue to perform its obligations under the contract as far as is reasonably practical, and shall seek all reasonable alternative means for performance not prevented by the force majeure event.

26. Termination for insolvency

26.1 The purchaser may at any time terminate the contract by giving written notice to the supplier if the supplier becomes bankrupt or otherwise insolvent. In this event, termination will be without compensation to the supplier, provided that such termination will not prejudice or affect any right of action or remedy which has accrued or will accrue thereafter to the purchaser.

27. Settlement of Disputes

27.1 If any dispute or difference of any kind whatsoever arises between the purchaser and the supplier in connection with or arising out of the contract, the parties shall make every effort to resolve amicably such dispute or difference by mutual consultation.

27.2 If, after thirty (30) days, the parties have failed to resolve their dispute or difference by such mutual consultation, then either the purchaser or the supplier may give notice to the other party of his intention to commence with mediation. No mediation in respect of this matter may be commenced unless such notice is given to the other party.

27.3 Should it not be possible to settle a dispute by means of mediation, it may be settled in a South African court of law.

27.4 Mediation proceedings shall be conducted in accordance with the rules of procedure specified in the SCC.

27.5 Notwithstanding any reference to mediation and/or court proceedings herein,

(a) the parties shall continue to perform their respective obligations under the contract unless they otherwise agree; and
(b) the purchaser shall pay the supplier any monies due the supplier.

28. Limitation of liability

28.1 Except in cases of criminal negligence or willful misconduct, and in the case of infringement pursuant to Clause 6;

(a) the supplier shall not be liable to the purchaser, whether in contract, tort, or otherwise, for any indirect or consequential loss or damage, loss of use, loss of production, or loss of profits or interest costs, provided that this exclusion shall not apply to any obligation of the supplier to pay penalties and/or damages to the purchaser; and

(b) the aggregate liability of the supplier to the purchaser, whether under the contract, in tort or otherwise, shall not exceed the total contract price, provided that this limitation shall not apply to the cost of repairing or replacing defective equipment.

29. Governing language

29.1 The contract shall be written in English. All correspondence and other documents pertaining to the contract that is exchanged by the parties shall also be written in English.

30. Applicable law

30.1 The contract shall be interpreted in accordance with South African laws, unless otherwise specified in SCC.

31. Notices

31.1 Every written acceptance of a bid shall be posted to the supplier concerned by registered or certified mail and any other notice to him shall be posted by ordinary mail to the address furnished in his bid or to the address notified later by him in writing and such posting shall be deemed to be proper service of such notice

31.2 The time mentioned in the contract documents for performing any act after such aforesaid notice has been given, shall be reckoned from the date of posting of such notice.

32. Taxes and duties

32.1 A foreign supplier shall be entirely responsible for all taxes, stamp duties, license fees, and other such levies imposed outside the purchaser's country.

32.2 A local supplier shall be entirely responsible for all taxes, duties, license fees, etc., incurred until delivery of the contracted goods to the purchaser.

32.3 No contract shall be concluded with any bidder whose tax matters are not in order. Prior to the award of a bid the Department must be in possession of a tax clearance certificate, submitted by the bidder. This certificate must be an original issued by the South African Revenue Services.

33. National Industrial Participation (NIP) Programme

33.1 The NIP Programme administered by the Department of Trade and Industry shall be applicable to all contracts that are subject to the NIP obligation.

34. Prohibition of Restrictive practices

34.1 In terms of section 4 (1) (b) (iii) of the Competition Act No. 89 of 1998, as amended, an agreement between, or concerted practice by, firms, or a decision by an association of firms, is prohibited if it is between parties in a horizontal relationship and if a bidder (s) is / are or a contractor(s) was / were involved in collusive bidding (or bid rigging).

34.2 If a bidder(s) or contractor(s), based on reasonable grounds or evidence obtained by the purchaser, has / have engaged in the restrictive practice referred to above, the purchaser may refer the matter to the Competition Commission for investigation and possible imposition of administrative penalties as contemplated in the Competition Act No. 89 of 1998.

34.3 If a bidder(s) or contractor(s), has / have been found guilty by the Competition Commission of the restrictive practice referred to above, the purchaser may, in addition and without prejudice to any other remedy provided for, invalidate the bid(s) for such item(s) offered, and / or terminate the contract in whole or part, and / or restrict the bidder(s) or contractor(s) from conducting business with the public sector for a period not exceeding ten (10) years and / or claim damages from the bidder(s) or contractor(s) concerned.