BID ADVERTISEMENT FORM				
Bid description	Supply, Delivery and Construction of 2x 2500 Capacity Layer Chicken Houses with Solar Power at Rex Farm (Ganspan).			
Bid number	NC/DALC/2084			
Name of institution	Department of Agriculture, Environmental Affairs, Rural Development and Land Reform			
The place where goods, works, or services are required	Rex Farm (Ganspan)			
Closing date and time	Date	11 December 2026	Time	11:00AM
Contact details	Postal address	Department of Agriculture, Environmental Affairs, Rural Development and Land Reform Private Bag X5018 Kimberley 8300 Attention: Acquisition Office		
	Physical address	Department of Agriculture, Environmental Affairs, Rural Development and Land Reform 162 George Street Kimberley 8300 Attention: Acquisition Office		
	Tel. no.	053 838 9194/97		
	Fax no.	N/A		
	E-mail address	bsebelego@daerl.co.za		
	Contact person	[Tidimalo Tlhaloganyo 082 559 3599		
Where bids can be collected	Bid Documents available on E-tender portal. Please download and bring the document to the compulsory site briefing for signature of attendance (Schedule 6 : Certificate of attendance at clarification meeting).			
Where bids should be delivered	162 George Street, Kimberley 8300			
Category *(refer to annexure A)*	4 CE or 4 GB			
Sector	Other			
Region	Frances Baard			
Compulsory briefing session/site visit	Date	04 December 2026		
	Time	10:00 Anyone arriving after 10h00 will not be allowed into the meeting		
	Venue	Vaalharts Research Station Co-ordinates : 27°57'19.50"S - 24°50'42,45"E]		

PUBLICATION OF AWARD FORM

agriculture, environmental affairs,
rural development and land reform

Department:
agriculture, environmental affairs,
rural development and land reform .
NORTHERN CAPE PROVINCE
REPUBLIC OF SOUTH AFRICA

PROCUREMENT DOCUMENT

Project Name: Rex Farming and Trading

Description: Supply, Delivery and Construction of 2x 2500 Capacity Layer Chicken Houses with Solar Power at Rex Farm (Ganspan).

Closing Date: 11 December 2026

Issued by:

Northern Cape: **Department of Agriculture, Environmental Affairs, Rural Development and Land Reform**

TEMOTHUO HOUSE

162 George Street

Kimberley

8300

Contact Person

Project Leader

Name:**[Tidimalo Tlhaloganyo**

Telephone: **082 559 3599**

Project Technician

Technical: Mogammad Mobara

Telephone: 083 787 8548

Name of Tenderer: .....

Total Tendered Amount (incl. vat): .....

Time for Completion (in weeks): .....

SUMMARY FOR TENDER OPENING PURPOSES

[To facilitate the reading out of tender parameters at the opening of tenders, the tenderer shall complete this form and submit it with his tender]

Name of contractor submitting the tender:.....

Tender amount *(as stated in the Form of Offer)*: R .....

Amount in words .....

Preferences claimed :.....(*Yes / No*)

If "Yes" state Specific Goal Rating:

Specified time for completion: **4 months**

Alternative time for completion offered? .....*(Yes / No)*

If "Yes", state time offered

Discounts offered? .....*(Yes / No)*

Details of discounts offered:

.....

.....

Prices Valid for 90 days :.....(*Yes / No*)

If "No" state Prices validity:

Details of contact person:

Name *(Print)*:.....

Telephone No: .....Fax No :.....

E-mail address:.....

Note: In the event of conflict between the data provided in this summary and that given in the tender, the latter shall prevail.

SIGNATURE ON BEHALF OF TENDERER: .....

Service Provider Initial_____

NORTHERN CAPE: DEPARTMENT OF AGRICULTURE, ENVIRONMENTAL AFFAIRS, RURAL DEVELOPMENT AND LAND REFORM

CONTENTS

SECTION	DESCRIPTION
COVER PAGE	
CONTENTS	
REMINDER	
	THE TENDER
PART T1	**TENDERING PROCEDURES**
T1.1	Tender Notice and Invitation to Tender
T1.2	Tender Data
PART T2	**RETURNABLE DOCUMENTS**
T2.1	List of Returnable Documents
	THE CONTRACT
PART C1	**AGREEMENTS AND CONTRACT DATA**
C1.1	Form of Offer and Acceptance
C1.2	Contract Data
C1.3	Occupational Health and Safety Agreement
PART C2	**PRICING DATA**
C2.1	Pricing Instructions
C2.2	Bill of Quantities
PART C3	**SCOPE OF WORK**
C3.1	Description of Works
C3.2	Engineering
C3.3	Procurement
C3.4	Construction
C3.5	Management
C3.6	Occupational Health and Safety Specification
C3.7	Environmental Management Plan
C3.8	Annexures
PART C4	**SITE INFORMATION**
C4	Site Information
	APPENDICES
APPENDIX A	LOCALITY PLAN
APPENDIX B	DRAWINGS

Service Provider Initial_____

REMINDER: PLEASE TAKE NOTE

IT CAME TO THE ATTENTION OF THE DEPARTMENT THAT PREVENTABLE MISTAKES OCCUR IN THE COMPLETION OF YOUR BID DOCUMENTS.

THE MOST COMMON MISTAKES ARE THE FOLLOWING:

1. NOT ATTACHING A CERTIFIED COPY OF AN IDENTITY DOCUMENT.
2. NOT ATTACHING A COPY OF COMPANY REGISTRATION.
3. THE USE OF CORRECTION FLUID/TAPE.
4. THE OMISSION OF THE DELIVERY PERIOD IN ALL AREAS OF THE BID DOCUMENT.
5. INCORRECT CALCULATIONS.
6. FAILURE TO SIGN ANY FORM WHERE YOUR SIGNATURE IS REQUIRED.
7. FAILING TO INCLUDE TAX CLEARANCE/SARS PIN AND CSD REPORT

THE **TENDER BOX** IS SITUATED AT **TEMOTHUO HOUSE, 162 GEORGE STREET, KIMBERLEY** AT THE MAIN ENTRANCE TO THE DEPARTMENT (NOT THE STREET ENTRANCE). PLEASE ENSURE THAT YOUR BIDS ARE DEPOSITED IN THIS BOX BEFORE THE OFFICIAL CLOSING TIME AND DATE OF THE BID.

Service Provider Initial_____

NORTHERN CAPE: DEPARTMENT OF AGRICULTURE, ENVIRONMENTAL AFFAIRS, RURAL DEVELOPMENT AND LAND REFORM

PART T1: TENDERING PROCEDURES

T1.1 Tender Notice and Invitation to Tender

T1.2 Tender Data

Service Provider Initial_____

NORTHERN CAPE: DEPARTMENT OF AGRICULTURE, ENVIRONMENTAL AFFAIRS, RURAL DEVELOPMENT AND LAND REFORM

T1.1 : TENDER NOTICE AND INVITATION TO TENDER

The Northern Cape: Department of Agriculture, Environmental Affairs, Rural Development and Land Reform hereby invites tenders for the Supply, Delivery and Construction of 2x 2500 Capacity Layer Chicken Houses with Solar Power at Rex Farm (Ganspan).

The works include: Supply, Delivery and Construction of 2x 2500 Capacity Layer Chicken Houses at Rex Farm (Ganspan) This would include the de-bushing of the site, demolishing of existing old structures, trenching of footings and foundations, erecting of steel structure, pouring of concrete floor, building up of structure walls, installation of heavy duty poultry curtains, complete water reticulation and electrical systems .

It is estimated that tenderers should have a CIDB contractor grading designation of **4 CE or** 4 GB and higher. Only those tenderers who are registered with the CIDB, in a contractor grading designation equal to or higher than the latest CIDB promulgated contractor grading designation, determined in accordance with the sum tendered will be eligible to tender.

An 80/20 point system is applicable to this bid. Proof of company address must be submitted in order to qualify for preference points.
The physical address for collection of tender documents is:
162 George street
Kimberley
8300

Bid Documents available on E-tender portal. Please download and bring the document to the compulsory site briefing for signature of attendance (Schedule 6 : Certificate of attendance at clarification meeting).

Queries relating to the issue of these documents may be addressed to:
Acquisition Office
Tel No. 053 838 9194/97
e mail: bsebelego@daerl.co.za

Project Leader:[Tidimalo Tlhaloganyo
Tel No. 082 559 3599
e mail: tetlhaloganyo@gmaill.com

A compulsory clarification meeting with representatives of the Employer will take place at Vaalharts Research Station Tuinbou Hall/Saal, Jan Kempdorp starting at 10:00 am. Failure to attend this meeting will lead to automatic disqualification and **no** service provider arriving after 10h00 will be allowed into the meeting.

Coordinates: 27°57'19.50"S - 24°50'42,45"E

The closing time for receipt of tenders is **11:00AM** on 11 December 2026 . **Telegraphic, telephonic, telex, facsimile, e-mail and late tenders will not be accepted.**

Tenders may only be submitted on the tender documentation that is issued.

Service Provider Initial_____

Requirements for sealing, addressing, delivery, opening and assessment of tenders are stated in the Tender Data.

Service Provider Initial_____

T1.2 : TENDER DATA

The conditions of tender are those contained in the latest edition of SANS 10845-3, Construction Procurement – Part 3: Standard Conditions of Tender.

SANS 10845-3 make several references to the Tender Data for details that apply specifically to this tender. The Tender Data shall have precedence in the interpretation of any ambiguity or inconsistency between it and the provisions of SANS 10845-3

Each item of data given below is cross-referenced to the clause in the SANS 10845-3 to which it mainly applies.

Clause number	Tender Data
3.1	The employer is **NORTHERN CAPE: DEPARTMENT OF AGRICULTURE, ENVIRONMENTAL AFFAIRS, RURAL DEVELOPMENT AND LAND REFORM**
3.2	The Tender Documents issued by the Employer comprise the following documents: **THE TENDER** **Part T1: Tendering procedures** T1.1 - Tender notice and invitation to tender T1.2 - Tender data **Part T2: Returnable documents** T2.1 - List of returnable documents T2.2 - Returnable Schedules **THE CONTRACT** **Part C1: Agreements and Contract data** C1.1 - Form of offer and acceptance C1.2 - Contract data C1.3 - Occupational Health and Safety Agreement **Part C2: Pricing data** C2.1 - Pricing instructions C2.2 - Bill of Quantities **Part C3: Scope of work** C3 - Scope of Work **Part C4: Site information** C4 - Site information

Service Provider Initial_____

Clause number	Tender Data	
3.4	Project Leader: [Tidimalo Tlhaloganyo Contact number: 082 559 3599 Email: tetlhaloganyo@gmaill.com	Project Technician: Mogammad Mobara Tel No: 083 787 8548 Email: mmobara@daerl.co.za
4.1	Only those tenderers who satisfy the following eligibility criteria and who provide the required evidence in their tender submissions are eligible to submit tenders and have their tenders evaluated:	
4.1	Only those tenderers who are registered with the CIDB, or are capable of being so prior to the evaluation of submissions, in a contractor grading designation equal to or higher than a contractor grading designation determined in accordance with the sum tendered, or a value determined in accordance with Regulation 25 (1B) or 25(7A) of the Construction Industry Development Regulations, for a **4 CE or 4** GB class of construction work, are eligible to have their tenders evaluated. Joint ventures are eligible to submit tenders provided that: • every member of the joint venture is registered with the CIDB; • the lead partner has a contractor grading designation in the **4 CE or 4 GB** class of construction work; and • the combined contractor grading designation calculated in accordance with the Construction Industry Development Regulations is equal to or higher than a contractor grading designation determined in accordance with the sum tendered for a **4 CE or** 4 GB class of construction work or a value determined in accordance with Regulation 25 (1B) or 25(7A) of the Construction Industry Development Regulations.	
4.7	Compulsory site meeting: Vaalharts Research Station Tuinbou Hall/Saal, Jan Kempdorp starting at 10:00 am. Failure to attend this meeting will lead to automatic disqualification and **no** service provider arriving after 10h00 will be allowed into the meeting. Coordinates 27°57'19.50"S - 24°50'42,45"E	
4.7.1	The arrangements for a compulsory clarification meeting are as stated in the Tender Notice and Invitation to Tender. Tenderers must sign the attendance register in the name of the tendering entity. Addenda will be issued to and tenders will be received only from those tendering entities appearing on the attendance register.	
4.9	Insurance Comprehensive insurance to the full value of the contract must be provided for the full contract period till final completion and issue of final completion certificate. Proof of payment and copy of contract must be supplied to the department as per clause 8.6 GCC 2010. Second edition	

Service Provider Initial_____

4.13.4	The tenderer is required to submit with his tender: (Only certificates) • **A Tax Clearance Certificate or PIN issued by the South African Revenue Services.** • **Proof of CIDB registration** • **Proof of company's address or confirmation from municipality must be attached** • **Joint venture agreement** • **Company registration form** • **A certified letter of goods standing from compensation commissioner** • **CSD registration**
4.13.5 4.15	The employer's details and address for delivery of tender offers and identification details that are to be shown on each tender offer package are: Location of Tender Box: **162 George Street** **Kimberley** **8301** **Identification details:** Tender **NC/DALC/2084** Closing date: 11 December 2026 Time: **11:00AM** Postal Address: **NORTHERN CAPE: DEPARTMENT OF AGRICULTURE, ENVIRONMENTAL AFFAIRS, RURAL DEVELOPMENT AND LAND REFORM** **ATTENTION:** **Acquisition Office** **PRIVATE BAG X5018** **KIMBERLEY** **8300**
4.13.5	Telephonic, telegraphic, telex, facsimile or e-mailed tender offers will not be accepted.
4.15	The closing time for submission of tender offers is **11:00AM** on the 11 December 2026
4.16	The BID offer validity period is 90 days.
4.19	Access shall be provided for the following inspections, tests and analysis: [General site inspection Soil analysis
5.1	The Employer will respond to requests for clarification received up to 5**(five)** working days before the tender closing time.
5.4	Tenders will be opened immediately after the closing time for tenders at **11:00AM**
5.11.4	The procedure for the evaluation of responsive tenders is **Method 3** The financial offer will be scored using Formula 2 (option 1) where the value of W_1 is: 1) 90 where the financial value inclusive of VAT of all responsive tenders received have a value in **excess** of R 50 000 000.00; or 2) 80 where the financial value inclusive of VAT of one or more responsive tender offers have a value that equals or is less than R50 000 000.00 3) Points for this bid shall be awarded to:

Service Provider Initial_____

- **THE BID PRICE (MAXIMUM OF 80 POINTS)**
- **SPECIFIC GOALS (MAXIMUM 20 POINTS)**

THE 80/20 OR 90/10 PREFERENCE POINT SYSTEMS

A maximum of 80 or 90 points is allocated for price on the following basis:

80/20 or **90/10**

$$Ps = 80\left(1 - \frac{Pt - P\,min}{P\,min}\right) \text{ or } \quad Ps = 90\left(1 - \frac{Pt - P\,min}{P\,min}\right)$$

Where

Ps = Points scored for price of tender under consideration

Pt = Price of tender under consideration

Pmin = Price of lowest acceptable tender

5.11.3 **Points awarded for Specific Goals.**

In terms of Regulation 5 (2) and 6 (2) of the Preferential Procurement Regulations, preference points must be awarded to a bidder for attaining Specific Goals in accordance with the table below

Specific Goals	Number of points (90/10 system)	Number of points (80/20 system)
Who had no franchise in national elections before the 1983 and 1993 Constitution	4	6
Who is female	2	4
Who has a disability	2	4
Who is youth	2	4
Locality NC Province	-	2

Service Provider Initial_____

5.13	**Acceptance of tender offer**
5.13	Tender offers will only be accepted if: a) the tenderer is registered on the Central Supplier Database (CSD) for the South African government (see https://secure.csd.gov.za/) unless it is a foreign supplier with no local registered entity b) the tenderer is in good standing with SARS according to the Central Supplier Database; c) the tenderer is registered with the Construction Industry Development Board in an appropriate contractor grading designation; d) the tenderer or any of its directors/shareholders is not listed on the Register of Tender Defaulters in terms of the Prevention and Combating of Corrupt Activities Act of 2004 as a person prohibited from doing business with the public sector; e) the tenderer has not: i) abused the Employer's Supply Chain Management System; or ii) failed to perform on any previous contract and has been given a written notice to this effect; f) the tenderer has completed the Compulsory Declaration and there are no conflicts of interest which may impact on the tenderer's ability to perform the contract in the best interests of the employer or potentially compromise the tender process; g) the tenderer is registered and in good standing with the compensation fund or with a licensed compensation insurer; h) the employer is reasonably satisfied that the tenderer has in terms of the Construction Regulations, 2003, issued in terms of the Occupational Health and Safety Act, 1993, the necessary competencies and resources to carry out the work safely.

Service Provider Initial_____

PART T2 : RETURNABLE DOCUMENTS

T2.1 List of Returnable Documents

Service Provider Initial_____

T2.1 : LIST OF RETURNABLE DOCUMENTS

The following documents are to be completed and returned as they constitute the tender. Whilst many of the returnable are required for the purpose of evaluating the tenders, some will form part of the subsequent contract, as they form the basis of the tender offer. For this reason, it is very important that tenderers return **all information requested.**

T2.1.1 RETURNABLE SCHEDULES REQUIRED FOR TENDER EVALUATION PURPOSES (included hereafter for completion)

Schedule 1: Declaration of Interest (NCP 4)
Schedule 2: Preference Points Claim (NCP 6.1)
Schedule 3: Compulsory Enterprise Questionnaire
Schedule 4: Authority of Signatory
Schedule 5: Proof of Experience Relevant to Proposed Work
Schedule 6: Certificate of Attendance at Clarification Meeting
Schedule 7: Record of Addenda
Schedule 8: A) Valid Tax Clearance Certificate or SARS PIN
B) Certificate of Contractors Registration issued by the CIDB
C) Tender Entity Identification
D) Certificate refer to T1.2 (4.13.4)
E) Proof of CSD registration or unique supplier number.
Schedule 9: Declaration Concerning Fulfillment of the Construction Regulations, 2014

Service Provider Initial_____

T2.1.2 OTHER SCHEDULES AND AFFIDAVITS THAT WILL BE INCORPORATED INTO THE CONTRACT (included hereafter for completion)

C1.1 : The Offer portion of the Form of Offer and Acceptance

C1.2 : Contract Data

C1.3 : Occupational Health and Safety Agreement

C2.1 : Pricing Instructions

C2.2 : Bills of Quantities

Service Provider Initial_____

SCHEDULE 1 : BIDDERS DECLOSURE

NCP4

1. Purpose of the form

1.1 Any person (natural or juristic) may make an offer or offers in terms of this invitation to bid. In line with the principles of transparency, accountability, impartiality, and ethics as enshrined in the Constitution of the Republic of South Africa, 1996 (Constitution), and further expressed in the various applicable legislation, it is required for the bidder to make this declaration in respect of the details required hereunder.

1.2 If a person is listed in the Register for Tender Defaulters and/or the List of Restricted Suppliers, that person will automatically be disqualified from the bid process.

2. Declaration on Employment by organ of state

(a) Is the bidder, or any of the directors / trustees / shareholders / members / partners of the bidder employed by an organ of state, as defined in section 239 of the Constitution? **YES/NO**

(b) If YES, furnish particulars of the names, individual identity numbers, in the table below:

Full Name	Identity Number	Name of Organ of State

Service Provider Initial_____

(c) Do you, or any person connected with the bidder, have a relationship with any person who is employed by the procuring institution? **YES/NO**

2.3.1 If so, furnish particulars:

.....

.....

(d) Does the bidder or any of its directors/trustees/shareholders members/partners or any person having a controlling interest in the enterprise have any interest in any other related enterprise, whether or not they are bidding for this contract? **YES/NO**

2.4.1 If so, indicate all companies registered in the CSD in the table below:

Supplier registration number (MAAA)	**Status (active/inactive/deleted)**

Failure to disclose all CSD-registered active companies linked to all Directors will lead to disqualification.

3 General Declaration

I, ..., the undersigned, in submitting the accompanying bid, do hereby make the following statements that I certify to be true and complete in every respect:

3.1. I have read and I understand the contents of this disclosure.

3.2. I understand that the accompanying bid will be disqualified if this disclosure is found to be false.

3.3. The bidder has arrived at the accompanying bid independently from, and without consultation, communication, agreement or arrangement with any competitor.

Service Provider Initial_____

3.4. In addition, there have been no consultations, communications, agreements or arrangements with any competitor regarding the quality, quantity, specifications, prices, including methods, factors or formulas used to calculate prices, market allocation, the intention or decision to submit or not to submit the bid, bidding with the intention not to win the bid and conditions or delivery particulars of the products or services to which this bid invitation relates.

3.5. The terms of the accompanying bid have not been, and will not be, disclosed by the bidder, directly or indirectly, to any competitor, prior to the date and time of the official bid opening or of the awarding of the contract.

3.6. There have been no consultations, communications, agreements or arrangements made by the bidder with any official of the procuring institution in relation to this procurement process prior to and during the bidding process except to provide clarification on the bid submitted where so required by the institution; and the bidder was not involved in the drafting of the specifications or terms of reference for this bid.

3.7. I am aware that, in addition and without prejudice to any other remedy provided to combat any restrictive practices related to bids and contracts, bids that are suspicious will be reported to the Competition Commission for investigation and possible imposition of administrative penalties in terms of section 59 of the Competition Act, 1998 (Act No. 89 of 1998) and or may be referred to law enforcement agencies for criminal investigation and or may be restricted from conducting business with the state for a period not exceeding 10 years in terms of the Prevention and Combating of Corrupt Activities Act, 2004 (Act No. 12 of 2004) or any other applicable legislation.

I CERTIFY THAT THE ABOVE IS CORRECT

I ACCEPT THAT THE PROCURING INSTITUTION MAY REJECT THE BID OR TAKE APPROPRIATE ACTION AGAINST ME IF THIS DECLARATION IS FALSE.

.....	.....
Signature	**Date**
.....	.....
Position	**Name of bidder**

Service Provider Initial_____

SCHEDULE 2 : PREFERENCE POINTS CLAIM

NCP6.1

PREFERENCE POINTS CLAIM FORM IN TERMS OF THE PREFERENTIAL PROCUREMENT REGULATIONS 2022

FORMAL PRICE TENDER R 1 000 000 UP TO R 50 000 000

This preference form must form part of all tenders invited. It contains general information and serves as a claim form for preference points for specific goals.

NB: BEFORE COMPLETING THIS FORM, TENDERERS MUST STUDY THE GENERAL CONDITIONS, DEFINITIONS AND DIRECTIVES APPLICABLE IN RESPECT OF THE TENDER AND PREFERENTIAL PROCUREMENT REGULATIONS, 2022

---

1 GENERAL CONDITIONS

1. The following preference point systems are applicable to invitations to tender:

a) the 80/20 system for requirements with a Rand value of up to R50 000 000 (all applicable taxes included); and

2. To be completed by the organ of state

a) The applicable preference point system for this tender is the 80/20 preference point system.

b) 80/20 preference point system will be applicable in this tender. The lowest/ highest acceptable tender will be used to determine the accurate system once tenders are received.

3. Points for this tender (even in the case of a tender for income-generating contracts) shall be awarded for:

- Price; and
- Specific Goals.

4. To be completed by the organ of state:

The maximum points for this tender are allocated as follows:

	POINTS
PRICE	80
SPECIFIC GOALS	20
Total points for Price and SPECIFIC GOALS	100

5. Failure on the part of a tenderer to submit proof or documentation required in terms of this tender to claim points for specific goals with the tender, will be interpreted to mean that preference points for specific goals are not claimed.

6. The organ of state reserves the right to require of a tenderer, either before a tender is adjudicated or

Service Provider Initial_____

at any time subsequently, to substantiate any claim in regard to preferences, in any manner required by the organ of state.

7. **Bidders who wish to claim points in terms of table 4.2 below need to provide proof for each point claimed as guided below:**

   a) Who had no franchise in national elections before the 1983 and 1993 Constitution – **attach certified copy of identity document (ID) and company registration document / CSD report to show/ substantiate percentage ownership equity.**

   b) Who is female- **attach certified copy of identity document (ID) and company registration document / CSD report to show/ substantiate percentage ownership equity.**

   c) Who has a disability – **attach doctor's letter confirming the disability**

   d) Who is youth - **attach certified copy of identity document (ID) and company registration document / CSD report to show/ substantiate percentage ownership equity.**

   e) **Locality – Refers to the Northern Cape Province – attach proof of address**

2. DEFINITIONS

4. **"tender"** means a written offer in the form determined by an organ of state in response to an invitation to provide goods or services through price quotations, competitive tendering process or any other method envisaged in legislation;

5. **"price"** means an amount of money tendered for goods or services, and includes all applicable taxes less all unconditional discounts;

6. **"rand value"** means the total estimated value of a contract in Rand, calculated at the time of bid invitation, and includes all applicable taxes;

7. **"tender for income-generating contracts"** means a written offer in the form determined by an organ of state in response to an invitation for the origination of income-generating contracts through any method envisaged in legislation that will result in a legal agreement between the organ of state and a third party that produces revenue for the organ of state, and includes, but is not limited to, leasing and disposal of assets and concession contracts, excluding direct sales and disposal of assets through public auctions; and

8. **"the Act"** means the Preferential Procurement Policy Framework Act, 2000 (Act No. 5 of 2000).

Service Provider Initial_____

3. FORMULAE FOR PROCUREMENT OF GOODS AND SERVICES

1. POINTS AWARDED FOR PRICE

3.1.1 THE 80/20 OR 90/10 PREFERENCE POINT SYSTEMS

A maximum of 80 or 90 points is allocated for price on the following basis:

80/20 **or** **90/10**

$$Ps = 80\left(1 - \frac{Pt - P\,min}{P\,min}\right) \text{ or } \quad Ps = 90\left(1 - \frac{Pt - P\,min}{P\,min}\right)$$

Where

Ps = Points scored for price of tender under consideration

Pt = Price of tender under consideration

Pmin = Price of lowest acceptable tender

a) POINTS AWARDED FOR SPECIFIC GOALS

1. In terms of Regulation 4(2); 5(2); 6(2) and 7(2) of the Preferential Procurement Regulations, preference points must be awarded for specific goals stated in the tender. For the purposes of this tender the tenderer will be allocated points based on the goals stated in table 1 below as may be supported by proof/ documentation stated in the conditions of this tender:
2. In cases where organs of state intend to use Regulation 3(2) of the Regulations, which states that, if it is unclear whether the 80/20 or 90/10 preference point system applies, an organ of state must, in the tender documents, stipulate in the case of—
   - an invitation for tender for income-generating contracts, that either the 80/20 or 90/10 preference point system will apply and that the highest acceptable tender will be used to determine the applicable preference point system; or
   - any other invitation for tender, that either the 80/20 or 90/10 preference point system will apply and that the lowest acceptable tender will be used to determine the applicable preference point system,

   then the organ of state must indicate the points allocated for specific goals for both the 90/10 and 80/20 preference point system.

Service Provider Initial_____

Table 1: Specific goals for the tender and points claimed are indicated per the table below.

(Note to organs of state: Where either the 90/10 or 80/20 preference point system is applicable, corresponding points must also be indicated as such.

Note to tenderers: The tenderer must indicate how they claim points for each preference point system.)

The specific goals allocated points in terms of this tender	Number of points allocated (80/20 system)	Percentage ownership equity (To be completed by the tenderer)	Number of points claimed (80/20 system) (To be completed by the tenderer)
a) Who had no franchise in national elections before the 1983 and 1993 Constitution	6		
b) Who is female	4		
c) Who has a disability	4		
d) Who is youth	4		
e) Locality NC Province	2		

DECLARATION WITH REGARD TO COMPANY/FIRM

3. Name of company/firm.....

4. Company registration number: .....

5. Company CSD number: .....

6. TYPE OF COMPANY/ FIRM

- ☐ Partnership/Joint Venture / Consortium
- ☐ One-person business/sole propriety
- ☐ Close corporation
- ☐ Public Company
- ☐ Personal Liability Company
- ☐ (Pty) Limited
- ☐ Non-Profit Company
- ☐ State Owned Company

[TICK APPLICABLE BOX]

Service Provider Initial_____

- I, the undersigned, who is duly authorised to do so on behalf of the company/firm, certify that the points claimed, based on the specific goals as advised in the tender, qualifies the company/ firm for the preference(s) shown and I acknowledge that:
  - The information furnished is true and correct;
  - The preference points claimed are in accordance with the General Conditions as indicated in paragraph 1 of this form;
  - In the event of a contract being awarded as a result of points claimed as shown in paragraphs 1.4 and 4.2, the contractor may be required to furnish documentary proof to the satisfaction of the organ of state that the claims are correct;
  - If the specific goals have been claimed or obtained on a fraudulent basis or any of the conditions of contract have not been fulfilled, the organ of state may, in addition to any other remedy it may have –
    - disqualify the person from the tendering process;
    - recover costs, losses or damages it has incurred or suffered as a result of that person's conduct;
    - cancel the contract and claim any damages which it has suffered as a result of having to make less favourable arrangements due to such cancellation;
    - recommend that the tenderer or contractor, its shareholders and directors, or only the shareholders and directors who acted on a fraudulent basis, be restricted from obtaining business from any organ of state for a period not exceeding 10 years, after the *audi alteram partem* (hear the other side) rule has been applied; and
    - forward the matter for criminal prosecution, if deemed necessary.

	.....
	SIGNATURE(S) OF TENDERER(S)
SURNAME AND NAME:	.....
DATE:	.....
ADDRESS:	.....
	.....

Service Provider Initial_____

SCHEDULE 3 : COMPULSORY ENTERPRISE QUESTIONNAIRE

The following particulars must be furnished. In the case of a joint venture, **separate** enterprise questionnaires in respect of each partner must be completed and submitted.

Section 1: Name of enterprise:.....

Section 2: VAT registration number, if any:.....

Section 3: CIDB registration number, if any:.....

Section 4: Particulars of sole proprietors and partners in partnerships

Name*	Identity number*	Personal income tax number*

* Complete only if sole proprietor or partnership and attach separate page if more than 3 partners

Section 5: Particulars of companies and close corporations

Company registration number .....

Close corporation number .....

Tax reference number .....

Section 6: Record of service of the state

Indicate by marking the relevant boxes with a cross, if any sole proprietor, partner in a partnership or director, manager, principal shareholder or stakeholder in a company or close corporation is currently or has been within the last 12 months in the service of any of the following:

3 a member of any municipal council

4 a member of any provincial legislature

5 a member of the National Assembly or the National Council of Province

6 an employee of any provincial department, national or provincial public entity or constitutional institution within the meaning of the Public Finance Management Act, 1999 (Act 1 of 1999)

7 a member of the board of directors of any municipal entity

8 a member of an accounting authority of any national or provincial public entity

9 an official of any municipality or municipal entity

10 an employee of Parliament or a provincial legislature

Service Provider Initial_____

If any of the above boxes are marked, disclose the following:

Name of sole proprietor, partner, director, manager, principal shareholder or stakeholder	Name of institution, public office, board or organ of state and position held	Status of service (tick appropriate column)	
		current	Within last 12 months

* Insert separate page if necessary

Section 7: Record of spouses, children and parents in the service of the state

Indicate by marking the relevant boxes with a cross, if any spouse, child or parent of a sole proprietor, partner in a partnership or director, manager, principal shareholder or stakeholder in a company or close corporation is currently or has been within the last 12 months been in the service of any of the following:

- a member of any municipal council
- a member of any provincial legislature
- a member of the National Assembly or the National Council of Province
- a member of the board of directors of any municipal entity
- an official of any municipality or municipal entity
- an employee of any provincial department, national or provincial public entity or constitutional institution within the meaning of the Public Finance Management Act, 1999 (Act 1 of 1999)
- a member of an accounting authority of any national or provincial public entity
- an employee of Parliament or a provincial legislature

Name of spouse, child or parent	Name of institution, public office, board or organ of state and position held	Status of service (tick appropriate column)	
		current	Within last 12 months

* Insert separate page if necessary

Service Provider Initial_____

The undersigned, who warrants that he/she is duly authorised to do so on behalf of the enterprise:

1. authorizes the Employer to obtain a tax clearance certificate from the South African Revenue Services that my / our tax matters are in order;
2. confirms that neither the name of the enterprise or the name of any partner, manager, director or other person, who wholly or partly exercises, or may exercise, control over the enterprise appears on the Register of Tender Defaulters established in terms of the Prevention and Combating of Corrupt Activities Act of 2004;
3. confirms that no partner, member, director or other person, who wholly or partly exercises, or may exercise, control over the enterprise, has within the last five years been convicted of fraud or corruption;
4. confirms that I / we are not associated, linked or involved with any other tendering entities submitting tender offers and have no other relationship with any of the tenderers or those responsible for compiling the scope of work that could cause or be interpreted as a conflict of interest;
5. confirms that the contents of this questionnaire are within my personal knowledge and are to the best of my belief both true and correct.

CERTIFICATION: COMPULSORY ENTERPRISE QUESTIONNAIRE

Signed ..... **Date** _____

Name ..... **Position** _____

Enterprise name _____

Service Provider Initial_____

SCHEDULE 4 : Certificate of Authority

Indicate the status of the tenderer by ticking the appropriate box hereunder. The tenderer must complete the certificate set out below for the relevant category.

(I) COMPANY	(II) CLOSE CORPORATION	(III) PARTNERSHIP	(IV) JOINT VENTURE	(V) SOLE PROPRIETOR

(I) CERTIFICATE FOR COMPANY

I,_____, Managing Director of the Board of Directors of _____, hereby confirm that by resolution of the Board (copy attached) taken on _____ 20 , Mr/Ms _____, acting in the capacity of _____, was authorised to sign all documents in connection with this tender and any contract resulting from it, on behalf of the company.

Managing Director: _____

As Witnesses: 1_____

2 _____ **Date:** _____

(II) CERTIFICATE FOR CLOSE CORPORATION

We, the undersigned, being the key members in the business trading as _____ _____ hereby authorise Mr/Ms _____, acting in the capacity of _____, to sign all documents in connection with this tender _____ and any contract resulting from it, on our behalf.

NAME	ADDRESS	SIGNATURE	DATE

Note: This certificate is to be completed and signed by all of the key members upon who rests the direction of the affairs of the Close Corporation as a whole.

(III). CERTIFICATE FOR PARTNERSHIP

We, the undersigned, being the key partners in the business trading as,_____

_____ hereby authorize Mr/Ms _____

acting in the capacity of _____, to sign all documents in connection with this tender and any contract resulting from it, on our behalf.

NAME	ADDRESS	SIGNATURE	DATE

Note: This certificate is to be completed and signed by all of the key partners upon whom rests the direction of the affairs of the Partnership as a whole.

(IV) CERTIFICATE FOR JOINT VENTURE

a) RESOLUTION OF BOARD OF DIRECTORS TO ENTER INTO CONSORTIA OR JOINT VENTURE

RESOLUTION of a meeting of the Board of *Directors / Members / Partners of:

_____

_____

(*Legally correct full name and registration number, if applicable, of the Enterprise)*

Held at _____(*place)* _____ *(date)*

RESOLVED that:

1. The Enterprise submits a Bid/Tender, in Consortium/Joint Venture with the following Enterprises:

_____

_____

(List all the legally correct full names and registration numbers, if applicable, of the Enterprises forming the Consortium/Joint Venture) to the **Department of Agriculture, Environmental Affairs, Rural Development and Land Reform** in respect of the following project:

Supply, Delivery and Construction of 2x 2500 Capacity Layer Chicken Houses with Solar Power at Rex Farm (Ganspan). _____

(*Project description as per Bid /Tender Document)*

Bid / Tender Number: _ **NC/DALC/2084** (*Bid / Tender Number as per Bid /Tender Document)*

Service Provider Initial_____

*Mr/Mrs/Ms:_____

in *his/her Capacity as: _____*(Position in the Enterprise)*

and who will sign as follows: _____

be, and is hereby, authorised to sign a consortium/joint venture agreement with the parties listed under item 1 above, and any and all other documents and/or correspondence in connection with and relating to the consortium/joint venture, in respect of the project described under item 1 above.

The Enterprise accepts joint and several liability with the parties listed under item 1 above for the due fulfilment of the obligations of the joint venture deriving from, and in any way connected with, the Contract to be entered into with the Department in respect of the project described under item 1 above.

The Enterprise chooses as its *domicilium citandi et executandi* for all purposes arising from this joint venture agreement and the Contract with the Department in respect of the project under item 1 above:

Physical address: _____

_____

_____

_____ (code)

Postal Address: _____

_____

_____

_____ (code)

Telephone number: _____ (code)

Fax number: _____ (code)

	NAME	***CAPACITY***	***SIGNATORY***
1			
2			
3			
4			
5			
6			
7			
8			
9			

Service Provider Initial_____

Note:	**ENTERPRISE STAMP**
*1. * Delete which is not applicable* *2. **NB**. This resolution must be signed by all the Directors / Members / Partners of the Bidding Enterprise* *3. Should the number of Directors / Members/Partners exceed the space available above, additional names and signatures must be supplied on a separate page*	

b) SPECIAL RESOLUTION OF CONSORTIA OR JOINT VENTURES

RESOLUTION of a meeting of the duly authorised representatives of the following legal entities who have entered into a consortium/joint venture to jointly bid for the project mentioned below: *(legally correct full names and registration numbers, if applicable, of the Enterprises forming a Consortium/Joint Venture)*

1. _____

_____

2. _____

_____

3. _____

_____

4. _____

_____

5. _____

_____

6. _____

_____

7. _____

_____

Held at _____ *(place)*_____ *(date)*

Service Provider Initial_____

RESOLVED that:

1. The above-mentioned Enterprises submits a Bid in Consortium/Joint Venture to the DEPT. OF AGRICULTURE, ENVIROMENTAL AFFAIRS, RURAL DEVELOPMENT AND LAND REFORM in respect of the following

Project Description: **Supply, Delivery and Construction of 2x 2500 Capacity Layer Chicken Houses with Solar Power at Rex** Farm (Ganspan).

2. Mr/Mrs/Ms: _____

in *his/her Capacity as: _____(*Position in the Enterprise)*

and who will sign as follows: _____

be, and is hereby, authorised to sign the Bid, and any and all other documents and/or correspondence in connection with and relating to the Bid, as well as to sign any Contract, and any and all documentation, resulting from the award of the Bid to the Enterprises in Consortium/Joint Venture mentioned above.

C The Enterprises constituting the Consortium/Joint Venture, notwithstanding its composition, shall conduct all business under the name and style of:

_____

D The Enterprises to the Consortium/Joint Venture accepts joint and several liabilities for the due fulfilment of the obligations of the Consortium/Joint Venture deriving from, and in any way connected with, the Contract entered into with the Department in respect of the project described under item A above.

- Any of the Enterprises to the Consortium/Joint Venture intending to terminate the consortium/joint venture agreement, for whatever reason, shall give the Department 30 days written notice of such intention. Notwithstanding such decision to terminate, the Enterprises shall remain jointly and severally liable to the Department for the due fulfilment of the obligations of the Consortium/Joint Venture as mentioned under item D above.
- No Enterprise to the Consortium/Joint Venture shall, without the prior written consent of the other Enterprises to the Consortium/Joint Venture and of the Department, cede any of its rights or assign any of its obligations under the consortium/joint venture agreement in relation to the Contract with the Department referred to herein.
- The Enterprises choose as the *domicilium citandi et executandi* of the Consortium/Joint Venture for all purposes arising from the consortium/joint venture agreement and the Contract with the Department in respect of the project under item A above:

Physical address: _____

_____

_____

_____ (code)

Postal Address: _____

_____

_____

_____ (code)

Telephone number: _____ (code)

Service Provider Initial_____

Fax number: _____ (code)

Service Provider Initial_____

	NAME	***CAPACITY***	***SIGNATORY***
1			
2			
3			
4			
5			
6			
7			

Note:

** Delete which is not applicable.*

2. *NB. This resolution must be signed by all the Duly Authorised Representatives of the Legal Entities to the Consortium/Joint Venture submitting this Bid.*
3. *Should the number of Duly Authorised Representatives of the Legal Entities joining forces in this Bid exceed the space available above, additional names and signatures must be supplied on a separate page.*
4. *Resolutions, duly completed and signed, from the separate Enterprises who participate in this Consortium/Joint Venture must be attached to the Special Resolution.*

(V) CERTIFICATE FOR SOLE PROPRIETOR

I,_____, hereby confirm that I am the sole owner of the business trading as _____.

Signature of Sole owner: _____

As Witnesses:

1_____

2._____

Date: _____

Service Provider Initial_____

SCHEDULE 5: PROOF OF EXPERIENCE RELEVANT TO PROPOSED WORK Attach proof of below mentioned experience in the form of completion certificates if not attached bids will be invalid. The following is a statement of similar work successfully executed by the company bidding:			
Employer, contact person and telephone number	**Description of Contract**	**Value of Work Inclusive of VAT (Rand)**	**Date Completed**

Signed ..... **Date**.....

Name..... **Position**.....

Tenderer.....

IF THE ABOVE SPACE IS INSUFFICIENT, PLEASE ATTACH DETAILED SIGNED COPY OF PROOF OF EXPERIENCE RELEVANT TO PROPOSED WORK.

Service Provider Initial_____

SCHEDULE 6 : CERTIFICATE OF ATTENDANCE AT CLARIFICATION MEETING

This is to certify that

.....(Tenderer)

Of.....(address)

was represented by the person(s) named below at the compulsory meeting held for all tenderers at .....(location),on.....

.....(date), starting at.....

We acknowledge that the purpose of the meeting was to acquaint ourselves with the site of the works and / or matters incidental to doing the work specified in the tender documents in order for us to take account of everything necessary when compiling our rates and prices included in the tender.

Particulars of person(s) attending the meeting:

Name ..... Signature .....

Capacity .....

Name ..... Signature .....

Capacity .....

Attendance of the above persons at the meeting is confirmed by the Employer's representative, namely:

Name ..... Signature .....

Capacity ..... Date & Time .....

NB: Document to be <u>returned in Original Black Ink</u> no copies will be accepted.

Service Provider Initial_____

SCHEDULE 7 : RECORD OF ADDENDA

We confirm that the following communications received from the Employer before the submission of this tender offer, amending the tender documents, have been taken into account in this tender offer:

	Date	Title or Details
1.		
2.		
3.		
4.		
5.		
6.		
7.		

Attach additional pages if more space is required.

Signed ..... Date .....

Name ..... Position .....

Tenderer .....

Service Provider Initial_____

SCHEDULE 8 : INFORMATION REQUIRED

A. TAX CLEARANCE CERTIFICATE

An **original** valid Tax Clearance Certificate from the South African Revenue Service (SARS) shall be attached to this Schedule.

Each party to a Consortium/Joint Venture shall submit a separate Tax Clearance Certificate.

B. CERTIFICATE OF CONTRACTOR'S REGISTRATION

A Certificate of the Contractor's Registration issued by the CIDB shall be attached to this schedule.

C. CERTIFIED COPY OF THE CERTIFICATE OF INCORPORATION

.....

D) Copy of Certificates refering to T1.2 (4.13.4)

E) Proof of CSD report.

Signed ..... Date .....

Name ..... Position .....

Tenderer .....

Service Provider Initial_____

SCHEDULE 9 :DECLARATION CONCERNING FULFILMENT OF THE CONSTRUCTION REGULATIONS, 2014

In terms of regulation 4(4) of the Construction Regulations, 2014 (hereinafter referred to as the Regulations), promulgated in terms of Section 43 of the Occupational Health and Safety Act, 1993 (Act No. 85 of 1993) the Employer shall not appoint a contractor to perform construction work unless the Contractor can satisfy the Employer that his/her firm has the necessary competencies and resources to carry out the work safely and has allowed adequately in his/her tender for the due fulfilment of all the applicable requirements of the Act and the Regulations.

Tenderers shall answer the questions below:

1. I confirm that I am fully conversant with the Regulations and that my company has (or will acquire/procure) the necessary competencies and resources to timeously, safely and successfully comply with all of the requirements of the Regulations.

(Tick)

YES	
NO	

2. Indicate which approach shall be employed to achieve compliance with the Regulations.

(Tick)

Own resources, competent in terms of the Regulations (refer to 3 below)	
Own resources, still to be hired and/or trained (until competency is achieved)	
Specialist subcontract resources (competent) - Specify: 	

3. Provide details of proposed key persons, competent in terms of the Regulations, who will form part of the Contract team as specified in the Regulations (CVs to be attached):

.....

.....

.....

4. Provide details of proposed training (if any) that will be undergone:

.....

.....

.....

.....

Service Provider Initial_____

5. List potential key risks identified and measures for addressing risks:

.....

.....

.....

.....

6. I have fully included in my tendered rates and prices (in the appropriate payment items provided in the Schedule of Quantities) for all resources, actions, training and any other costs required for the due fulfilment of the Regulations for the duration of the construction and defects repair period

(Tick)

YES	
NO	

SIGNATURE OF PERSON(S) AUTHORISED TO SIGN THIS TENDER:

1. ..... ID NO: .....

(Name in Print): .....

2. ..... ID NO: .....

(Name in Print): .....

Service Provider Initial_____

PART C1 : AGREEMENT AND CONTRACT DATA

The General Conditions of Contract for Construction Works, Second Edition, 2010 have been compiled on the basis that the following supplementary documentation in the format of pro formas, once completed by the Party of Parties as relevant, shall form part of the Contract.

C1.1 Form of Offer and Acceptance

C1.2 Contract Data

C1.3 Occupational Health and Safety Agreement

Service Provider Initial_____

C1.1 : FORM OF OFFER AND ACCEPTANCE

1. OFFER

The Employer, identified in the Acceptance signature block, has solicited offers to enter into a contract in respect of the following works:

DEPARTMENT OF AGRICULTURE, ENVIRONMENTAL AFFAIRS, RURAL DEVELOPMENT AND LAND REFORM:

DESCRIPTION: **SUPPLY, DELIVERY AND CONSTRUCTION OF 2X 2500 CAPACITY LAYER CHICKEN HOUSES WITH SOLAR POWER AT REX FARM (GANSPAN).**

The Tenderer, identified in the Offer signature block below, has examined the documents listed in the Tender Data and addenda thereto as listed in the Tender Schedules, and by submitting this Offer has accepted the Conditions of Tender.

By the representative of the Tenderer, deemed to be duly authorised, signing this part of this Form of Offer and Acceptance, the Tenderer offers to perform all of the obligations and liabilities of the Contractor under the Contract including compliance with all its terms and conditions according to their true intent and meaning for an amount to be determined in accordance with the Conditions of Contract identified in the Contract Data.

THE OFFERED TOTAL OF THE PRICES INCLUSIVE OF VALUE-ADDED TAX IS

.....

..... Rand (in words);

R .....(in figures)

This Offer may be accepted by the Employer by signing the Acceptance part of this Form of Offer and Acceptance and returning one copy of this document to the Tenderer before the end of the period of validity stated in the Tender Data, whereupon the Tenderer becomes the party named as the Contractor in the Conditions of Contract identified in the Contract Data.

For the **Tenderer:**

Signature .....

Name .....

Capacity .....

Name and address of **organisation**:

.....

.....

Name and signature of **witness**:

Signature .....

Name .....

Date .....

Service Provider Initial_____

2. ACCEPTANCE

By signing this part of this Form of Offer and Acceptance, the Employer identified below accepts the Tenderer's Offer. In consideration thereof, the Employer shall pay the Contractor the amount due in accordance with the Conditions of Contract identified in the Contract Data. Acceptance of the Tenderer's Offer shall form an agreement between the Employer and the Tenderer upon the terms and conditions contained in this Agreement and in the Contract that is the subject of this Agreement.

The terms of the contract are contained in

Part C1 : Agreements and Contract Data (which includes this Agreement)

Part C2 : Pricing Data

Part C3 : Scope of Work

Part C4 : Site Information

and drawings and documents or parts thereof, which may be incorporated by reference into Parts C1 to C4 above.

Deviations from and amendments to the documents listed in the Tender Data and any addenda thereto, as listed in the Tender Schedules as well as any changes to the terms of the Offer agreed by the Tenderer and the Employer during this process of offer and acceptance, are contained in the Schedule of Deviations attached to and forming part of this Agreement. No amendments to or deviations from said documents are valid unless contained in this Schedule, which must be duly signed by the authorised representatives of both parties.

The Tenderer shall, within two weeks after receiving a completed copy of this Agreement including the Schedule of Deviation (if any), contact the Employer's agent (whose details are given in the Contract Data) to arrange the delivery of any bonds, guarantees, proof of insurance and any other documentation to be provided in terms of the Conditions of Contract identified in the Contract Data at, or just after, the date this Agreement comes into effect. Failure to fulfil any of the obligations in accordance with those terms shall constitute a repudiation of this Agreement.

Notwithstanding anything contained herein, this Agreement comes into effect on the date when the Tenderer receives one fully completed original copy of this document, including the Schedule of Deviations (if any). Unless the Tenderer (now Contractor), within five working days of the date of such receipt notifies the Employer in writing of any reason why he cannot accept the contents of this Agreement, this Agreement shall constitute a binding contract between the parties,

For the **Employer:**

Signature .....

Name .....

Capacity Head of Department .....

Name and address of organisation:

Department of Agriculture, Environmental Affairs, Rural Development and Land Reform Northern Cape Province, ...

162 Goerge Street, Kimberley 8301.....

Name and signature of witness:

Signature .....

Name .....

Date .....

Service Provider Initial_____

3. SCHEDULE OF DEVIATIONS

Notes:

The extent of deviations from the tender documents issued by the Employer prior to the tender closing date is limited to those permitted in terms of the Conditions of Tender.

A Tenderer's covering letter shall not be included in the final contract document. Should any matter in such letter, which constitutes a deviation as aforesaid, become the subject of agreements reached during the process of, offer and acceptance, the outcome of such agreement shall be recorded here.

Any other matter arising from the process of offer and acceptance either as a confirmation, clarification or change to the tender documents, and which it is agreed by the Parties becomes an obligation of the contract, shall also be recorded here.

Any change or addition to the tender documents arising from the above agreements and recorded here, shall also be incorporated into the final draft of the contract.

- Subject .....

  Details .....

- Subject .....

  Details .....

- Subject .....

  Details .....

- Subject .....

  Details .....

By the duly authorised representatives signing this Schedule of Deviations, the Employer and the Tenderer agree to and accept the foregoing Schedule of Deviations as the only deviations from and amendments to the documents listed in the Tender Data and addenda thereto as listed in the Tender Schedules, as well as any confirmation, clarification or change to the terms of the offer agreed by the Tenderer and the Employer during this process of offer and acceptance.

Service Provider Initial_____

It is expressly agreed that no other matter whether in writing, oral communication or implied during the period between the issue of the tender documents and the receipt by the Tenderer of a completed signed copy of this Agreement shall have any meaning or effect in the contract between the parties arising from this Agreement.

For the Tenderer	For the Employer
.....	Signature(s).....
.....	Name(s) .....
	Capacity Head of Department
Name and address of organization	Name and address of organization
.....	162 Goerge Street, Kimberley 8301 .....
.....	.....
.....	Witness Signature .....
.....	Witness Name .....
.....	Date .....

The Tenderer, (now Contractor), identified in the Offer part of this Agreement hereby confirms receipt from the Employer, identified in the Acceptance part of this agreement, of one fully completed original copy of this Agreement, including the Schedule of Deviations (if any) today:

the .....(day) of (month) .....20..... (year)

at ..... (place)

For the Contractor:

Signature .....

Name .....

Capacity .....

Signature and name of witness:

Signature .....

Name .....

Service Provider Initial_____

C1.2: CONTRACT DATA

The Conditions of Contract are the General Conditions of Contract for Construction Works (2nd Edition 2010) published by the South African Institution of Civil Engineering (SAICE). Copies of these conditions of contract may be obtained from the SAICE Tel no.: (0)11 805 5947.

The General Conditions of Contract for Construction Works make several references to the Contract Data. The Contract Data shall have precedence in the interpretation of any ambiguity or inconsistency between it and the General Conditions of Contract.

Each item of data given below is cross-referenced to the clause in the General Conditions of Contract for Construction Works to which it mainly applies.

PART 1 : DATA PROVIDED BY THE EMPLOYER

CLAUSE	DESCRIPTION
1.1.1.13	The Defects Liability Period is twelve (12) months measured from the date of the Certificate of Completion.
1.1.1.15 1.2.1.2	The name of the Employer is the Department of Agriculture, Environmental Affairs, Rural Development and Land Reform The Employer's address for receipt of communications and notices is : Telephone: 087 630 0387 **Address (Postal):** **Address (Physical)** P/Bag 5018 Temothuo House 162 George Street Kimberley Kimberley 8300 8300
1.3.2	The governing law is the law of the Republic of South Africa.
1.6	The special non-working days are all statutory public holidays and the yearend break is 14 December 2026-04 January 2027 . The year-end break shall be in accordance with the dates recommended by SAFCEC.
3.1.3	The Engineer shall obtain the specific approval before executing any of the following functions or duties: • The issuing of a variation order in terms of Clause 6.3.2. • Nomination of Engineer's Representative in terms of Clause 3.2.1. • Engineer's authority to delegate in terms of Clause 3.2.4. • Non-working times in terms of Clause 5.8.1. • Suspension of the Works in terms of Clause 5.11.1. • Acceleration instead of extension of time in terms of Clause 5.12.4.
4.3.2	If required, and for the duration of this contract, the Contractor shall provide proof to the Engineer that the Contractor is in good standing with respect to duties, taxes, levies and contributions required in terms of legislation applicable to the work in this Contract. Failure to provide such proof shall entitle the Employer to withhold any payments due to the Contractor until such proof is provided.

Service Provider Initial_____

4.4 4.4.1 4.4.2 4.4.3 4.4.4 4.4.5	Subcontracting **The Contractor shall not subcontract the whole contract. Subcontract must not exceed 25% of the contract. Engineering approval must be obtained for sub-contracting.** The Contractor shall be liable for the acts, defaults and negligence of any subcontractor, his agents or employees as fully as if they were responsible for the acts, defaults or negligence of the Contractor. The contractual relationship between the Contractor and any subcontractors selected by the Contractor in consultation with the Employer in accordance with the requirements of and a procedure set out in the Scope of Work, shall be the same as if the Contractor had appointed the subcontractor in terms of Clause 4.4.2. Any appointment of a subcontractor in accordance with Clause 4.4.3 shall not amount to a contract between the Employer and the subcontractor, or a responsibility or liability on the part of the Employer to the subcontractor and shall not relieve the Contractor from any liability or obligation under the contract. In the event of termination of the contract under Clause 9.2, the subcontract in terms of Clause 4.4.3 shall be assigned to the Engineer upon such an instruction by the Employer.
5.2.1	The Commencement date shall be the date of Official site hand over by the Departmental Official once the order form and service level agreement has been signed
5.3.1	The documentation required before commencement with the execution of works is: □ **Work programme and projected cash flow.** • **Insurance for works and materials** • **Occupational Health and Safety Plan** • **Environmental Management Plan** • **Contract between famer and contractor for water and electricity** The commencement date of the project would only be if above stated information and documents has been handed in to the Department and has been approved by the Departments authorised Engineer.
5.3.2	The time to submit documentation from commencement date is within fourteen (14) days
5.4.2	Access to and possession of the site shall not be exclusive to the Contractor insofar as the provisions of Clause 4.8 apply and where on-going use by the general public is required. The Contractor shall bear all costs and charges for special and temporary rights of way required by him in connection with access to the site

Service Provider Initial_____

5.8.1	The non-working days are Sundays The special non-working days are: • All Gazetted public holidays falling outside the year end break • The year-end break commencing on **14** December 2026-04 January 2027 .
5.13.1	The penalty for failing to complete the Works is **0.1% of total contract value per calendar day**
5.16.3	The latent defects period is **10** years for civil engineering works, 5 years for building works, 2 years for electrical and mechanical works.
6.2.3	The expiry date (completion of the defects liability period) shall be the date, of the issue by the Engineer, of the Final Approval Certificate on the completion of the Works.
6.5.1.2.3	The percentage allowance to cover overhead charges must not exceed **15%.**
6.8.2	*Add the following to Clause 6.8.2:* The Contract Price shall **not** be subject to any contract price adjustment and the rates and prices tendered in the bill of quantities shall be final and binding throughout the period of the Contract.
6.8.4	*Add the following to Clause 6.8.4:* Notwithstanding the above, in the event that a public holiday is proclaimed within 28 days before the closing date for tenders, no costs other than those that can be claimed under Clause 5.12.3 shall be added to the contract price.
6.10.3	*Add the following to Clause 6.10.3:* Interim payments to the Contractors shall be subject to a retention by the Employer of an amount limited at **10%** of the said amounts due to the contractor. A guarantee in lieu of retention is not permitted.
6.10.4	*Add the following to clause 6.10.4:* Notwithstanding the above, the Engineer shall be empowered to withhold the delivery of the payment certificate until the Contractor has complied with his obligations to report in terms of Clause 4.10.2 and as described in the Scope of Work.
8.6.1.1.2	The value of Plant and materials supplied by the Employer to be included in the insurance sum is **R 0.00 (Nil)**.

Service Provider Initial_____

8.6.1.3 8.6.1.5	Add the following to Clause 8.6.1.3: The limit of indemnity for liability insurance is **R 5 000 000** for any single claim – the number of claims to be unlimited during the construction and defects liability periods. In addition to the insurances required in terms of General Conditions of Contract Clauses 8.6.1.1 to 8.6.1.4 the following insurance is also required: • Insurance of Construction Equipment (including tools, offices and other temporary structures and contents) and other things (except those intended for incorporation into the Works) brought onto the site for a sum sufficient to provide for their replacement. • Insurance in terms of the provisions of the Compensation of Occupational injuries and Diseases Act No. 130 of 1993. • Motor Vehicle Liability Insurance comprising (as a minimum) "Balance of Third Party" Risks including Passenger Liability Indemnity. • Where the contract involves manufacturing and/or fabrication of the works or part thereof at premises other than the Site, the Contractor shall satisfy the Employer that all materials and equipment for incorporation in the works are adequately insured during manufacture and/or fabrication. In the event of the Employer having an insurable interest in such works during manufacture or fabrication then such interest shall be noted by endorsement to the Contractor's Policies of Insurance.
8.6.6	The evidence that the insurances have been effected in terms of Clause 8.6.1, shall be in the form of an insurance broker's warranty worded precisely as given in Part C1.6 Insurance Broker's Warranty.
9.2.1 9.2.1.3.8 9.2.1.3.9	Add the following to Clauses after Clause 9.2.1.3.7: The Contractor committed a corrupt or fraudulent act during the procurement process or the execution of the contract. An official or other role player committed any corrupt or fraudulent act during the procurement process or in the execution of the contract that benefitted the contractor.
10.7.1	Disputes shall be resolved by negotiation, mediation, failing which by arbitration.

Service Provider Initial_____

	ADDITIONAL CONDITIONS OF CONTRACT
11	**Non-compliance with Engineer's Instructions** Should the Contractor fail within reasonable time to carry out the Engineer's instructions regarding any matter whatsoever on which he is authorized to order and direct the Contractor, then without vitiating the Contract and without prejudice to any other remedy the Employer may have under the Contract, the Employer may, after serving notice of its intention on the Contractor, itself take such action or employ others to take such action on its behalf as the Contractor has failed to take on the Engineer's instructions. For this purpose the Employer may use any suitable plant or materials brought on Site by the Contractor. The cost to the Employer of taking action on account of the Contractor's failure to carry out the Engineer's instructions shall be for the Contractor's account and may be recovered from the Contractor by the Employer, but such work shall be valued as if performed by the Contractor in terms of the Contract at Contract rates and included in the payments due to the Contractor.
12	**Implementation of the Occupational Health and Safety Act No. 85 of 1993** The Employer and the Contractor hereby agree, in terms of the provisions of Section 37(2) of the Occupational Health and Safety Act, Act no. 85 of 1993 and the relevant Regulations made thereunder, with specific reference to the Construction Regulations of 2014, hereinafter referred to as "the Act", that the Contractor as an Employer in its own right and in its capacity as Contractor for the execution of the Works, shall have certain obligations and that the following arrangement shall apply between them to ensure compliance by the Contractor with the provisions of the Act, namely: i)The Contractor undertakes to acquaint the appropriate officials and the employees of the Contractor with all the relevant provisions of the Act, and the regulations promulgated in terms of the Act, and ii)The Contractor undertakes that all relevant duties, obligations and prohibitions imposed in terms of the Act and regulations will be fully complied with, and iii)The Contractor shall be obliged to report forthwith to the Employer any investigation, complaint, or criminal charge which may arise as a consequence of the provisions of the Act and regulations pursuant to work performed on behalf of the Employer, and shall, on written demand, provide full details in writing of such investigation, complaint or criminal charge.

Service Provider Initial_____

13 The additional conditions of tender are:

1. **The lowest or any tender will not necessarily be accepted.**

2. **Bills of Quantities**

Service Provider are requested to check the Bill of Quantities and if any page is missing or duplicated, or if any figure or text is illegible or if any uncertainty or doubt exists as to the meaning of any description, or if these Bills of Quantities contains any obvious error, Service Provider must notify the Department immediately to obtain the necessary rectification or explanation. No liability whatsoever with regards to the quoted amount will be recognized as a result of the aforementioned. No alteration, erasure, omission, or addition is allowed to be made to the text or conditions contained in these Bills of Quantities. If any such alteration, amendment, note or addition is made, it will not be recognized and the Bill of Quantities will be deemed to be as originally drawn up by the Department. **The Bills of Quantities is not meant for ordering any materials.** Any orders based on the Bill of Quantities is at the Service Provider own risk.

3. **Method of Measurement**
These Bills of Quantities and method of measurement where compiled in accordance with the method and guidance as set out in the SANS 1200 specification and/or any amendments thereof.

4. **Trades Names**
Service Provider attention is drawn to the fact that wherever names or references to any catalogue have been made in these Bills of Quantities, it is purely to establish a standard for the required material. If use is made of any other material as approved in lieu of the prescribed trade name or catalogue, the necessary price adjustments will be made and variation orders issued.

5. **Defects Liability Period**
The defects liability period is calculated from the date on which the **Certificate of Completion(As per clause 5.14.2)** issued and is as follows:

a) General building work	12 months
b) Electrical installation	12 months unless stated otherwise
c) Mechanical installation	12 months
d) Civil work	12 months

6. **SPECIAL NOTE TO TENDERERS**
Service Provider must take into account all the principles of the RDP, the Government's policies on job creation as well as the problems they may encounter with the community organizations in the particular area before submitting their quotation as no claims in this regard will be considered.

7. **Joint Venture**
   - In the case of a joint venture, **all partners must include and complete a NCP4, both their SARS CERTIFICATES or SARS PIN, PROOF OF COMPANY ADDRESS and their Joint Venture Agreement.**
   - **In the case of a partnership, all partners must include their partnership agreement.**

8. It is the responsibility of every bidder to sign the attendance register and **Schedule 6 : certificate of attendance at clarification meeting** at the compulsory site meeting.

Service Provider Initial_____

	9.	**Service Providers must tender on all item numbers and will be disqualified if failing to bid on all items.**
	10.	All material must be SABS approved where applicable.
	11.	References of relevant previous work must be attach to tender.
	12.	**Recent (not older than 3 months) proof of company's address or confirmation from the municipality should be attached. Failure to submit proof of company's address may invalidate your bid.**
	13.	The use of correction fluid tape will invalidate your bid.
	14.	The department reserves the right to not award the tender or accept the lowest tender for the bid.
	15.	Once original tax invoice has been submitted, the employer's agent will verify it within 7 days and payment will be made within 30 days thereafter.
	16.	**Labour requirement: Monthly/Weekly/Fortnightly pay sheets, time sheets, certified ID copies and labour contracts/appointment letters including UIF compliance. Failure to submit this documents will lead to payments being withheld.**
	17.	Camp and construction site must be removed and cleaned up after construction is completed, this site will be inspected before final payment is approved by project leader.
	18.	Contractor must make provision for: Own diesel and lubrication Oil spills – cost to clean Suitable accommodation and ablution facilities In conjunction with land owner, ascertain himself of any pipes, or services that may be in or near the working area. The service provider will be liable for the repair of these services and pipes should any damage occur.

Service Provider Initial_____

	19. The tenderer shall, when requested by the Employer to do so, submit the names of all management and supervisory staff that will be employed to supervise the Labour Intensive portion of the works together with satisfactory evidence that such staff members satisfy the eligibility requirements. 20. The Northern Cape Provincial Supply Chain Management Procurement Policy Framework, approved in December 2018, States that the Provincial Departments must at least spend 60% of their procurement budget on Designated Groups within the province. The Department Reserves the right to award contracts based on the above mentioned framework policy 21. On completion of the construction, all component in the building must be tested by the contractor in the presence of the project leader and beneficiaries. 22. Pricing must include all Transport and Labour required to complete the works successfully. 23. All critical height level points and coordinates on drawing must be confirmed and acknowledged on site. This must be confirmed before commencing with any construction of a permanent nature.

Service Provider Initial_____

C1.2 : CONTRACT DATA

PART 2 : DATA PROVIDED BY THE CONTRACTOR

Clause	Description
1.1.1.9	The name of the Contractor is .... *[Enter the Legal name of the Contractor].*
1.2.1.2	The Contractor's address for receipt of communications and notices is : Telephone: ..... Facsimile: ..... E-mail : ..... Address (Postal) :..... Address (Physical) : ....
1.1.1.14	The time for completing the Works is ..... days/weeks/months
6.5.1.2.3	The percentage allowance to cover all overhead charges for work executed on a day work basis is: Labour ..... % Materials ..... %

Service Provider Initial_____

C1.3 : OCCUPATIONAL HEALTH AND SAFETY AGREEMENT

AGREEMENT MADE AND ENTERED INTO BETWEEN THE DEPARTMENT OF AGRICULTURE, ENVIRONMENTAL AFFAIRS, RURAL DEVELOPMENT AND LAND REFORM (HEREINAFTER CALLED THE "EMPLOYER") AND

..... ,
(Contractor/Mandatory/Company/CC Name)
IN TERMS OF SECTION 37(2) OF THE OCCUPATIONAL HEALTH AND SAFETY ACT, ACT No. 85 OF 1993 AS AMENDED.

I, ..., representing
..... , as an employer
in its own right, do hereby undertake to ensure, as far as is reasonably practicable, that all work will be performed, and all equipment, machinery or plant used in such a manner as to comply with the provisions of the Occupational Health and Safety Act (OHSA) and the Regulations promulgated there under.

I furthermore confirm that I am/we are registered with the Compensation Commissioner and that all registration and assessment monies due to the Compensation Commissioner have been fully paid or that I/We are insured with an approved licensed compensation insurer.
COID ACT Registration Number: .....
OR Compensation Insurer: ..... Policy No.: .....

I undertake to appoint, where required, suitable competent persons, in writing, in terms of the requirements of OHSA and the Regulations and to charge him/them with the duty of ensuring that the provisions of OHSA and Regulations as well as the Council's Special Conditions of Contract, Way Leave, Lock-Out and Work Permit Procedures are adhered to as far as reasonably practicable.

I further undertake to ensure that any subcontractors employed by me will enter into an occupational health and safety agreement separately, and that such subcontractors comply with the conditions set.

I hereby declare that I have read and understand the appended Occupational Health and Safety Conditions and undertake to comply therewith at all times.

I hereby also undertake to comply with the Occupational Health and Safety Specification and Plan.

Signed and sworn to before me at ..... on this .....day of ..... 20.....

....
Witness **Mandatory**

Signed and sworn to before me at ..... on this .... day of ..... 20.....

....
Witness for and on behalf of
The Department of Agriculture, Environmental Affairs, Rural Development and Land Reform

Service Provider Initial_____

OCCUPATIONAL HEALTH AND SAFETY CONDITIONS

1. The Chief Executive Officer of the Contractor shall assume the responsibility in terms of Section 16(1) of the Occupational Health and Safety Act (as amended). Should the Contractor assign any duty in terms of Section 16(2), a copy of such assignment shall immediately be provided to the representative of the Employer as defined in the Contract.
2. All work performed on the Employer's premises shall be performed under the supervision of the construction supervisor who understand the hazards associated with any work that the Contractor performs on the site in terms of Construction Regulations 2014.
3. The Contractor shall appoint a Competent Person who shall be trained on any occupational health and safety aspect pertaining to them or to the work that is to be performed.
4. The Contractor shall ensure that he familiarizes himself with the requirements of the Occupational Health and Safety Act and that he, his employees, and any sub-contractors, comply with them.
5. Discipline in the interests of occupational health and safety shall be strictly enforced.
6. Personal protective equipment shall be issued by the Contractor as required and shall be worn at all times where necessary.
7. Written safe work procedures and appropriate precautionary measures shall be available and enforced, and all employees shall be made conversant with the contents of these practices.
8. No substandard equipment/machinery/articles or substances shall be used on the site.
9. All incidents referred to in terms of Section 24 of the Occupational Health and Safety Act shall be reported by the Contractor to the Department of Labour and the Employer.
10 The Employer hereby obtains an interest in the issue of any formal inquiry conducted in terms of Section 32 of the Occupational Health and Safety Act and into any incident involving a Contractor and/or his employees and/or his sub-contractor/s.
11. No use shall be made of any of the Employer's machinery / plant / equipment / substance / personal protective equipment or any other article without prior arrangement and written approval.
12. No alcohol or any other intoxicating substance shall be allowed on the site. Any person suspected of being under the influence of alcohol or any other intoxicating substance shall not be permitted access to, or allowed to remain on the site.
13. Prior to commencement of any work, verified copies of all documents mentioned in the agreement, must be presented to the Employer.

Service Provider Initial_____

PART C2 : PRICING DATA FOR WORKS

C2.1 Pricing Instructions

C2.2 Bill of Quantities

Service Provider Initial_____

C2.1 : PRICING INSTRUCTIONS

C2.1.1 Measurement and payment shall be in accordance with Clause 8 of the SABS 1200 Standardised Specifications for Civil Engineering Construction referred to in the Scope of Works, subject to the variations and amendments contained in the section "Applicable SANS 1200 standardised specifications".

C2.1.2 Descriptions in the Bills of Quantities are abbreviated and comply generally with those in the Standardised Specifications. Clause 8 of each Standardised Specification, read together with the relevant clauses of the Scope of Work, set out what ancillary or associated activities are included in the rates for the operations specified. Should any requirements of the measurement and payment clause of the applicable Standardised Specification, or the Scope of Work, conflict with the terms of the Bill, the requirements of the Standardised or Scope of Work, as applicable, shall prevail.

C2.1.3 The clauses in a specification in which further information regarding the Bill item can be obtained appear under "Reference clause" in the Bills of Quantities. The reference clauses indicated are not necessarily the only sources of information in respect of schedule items. Further information and set specifications may be found elsewhere in the contract documents. Standardised Specifications are identified by the letter or letters which follow SABS in the SABS 1200 series of specifications, e.g. G for SABS 1200 G.

C2.1.4 Unless otherwise stated, items are measured nett in accordance with the drawings, and no allowance is made for waste.

C2.1.5 The quantities set out in these Bills of Quantities are approximate and do not necessarily represent the actual amount of work to be done. The quantities of work accepted and certified for payment will be used for determining payments due and not the quantities given in the Bills of Quantities.

C2.1.6 The prices and rates to be inserted in the Bills of Quantities are to be the full inclusive prices for the work described under the several items. Such prices and rates shall cover all costs and expenses that may be required in and for the execution of the work described, and shall cover the cost of all general risks, liabilities, and obligations set forth or implied in the documents on which the tender is based, as well as overhead charges and profit. The prices will be used as a basis for assessment of payment for additional work that may have to be carried out.

C2.1.7 It will be assumed that prices included in these Bills of Quantities are based on Acts, Ordinances, Regulations, By-laws, International Standards and National Standards that were published 28 days before the closing date for tenders. (Refer to www.stanza.org or www.iso.org for information on standards).

C2.1.8 Where the Scope of Work requires detailed drawings and designs or other information to be provided, all costs associated therewith are deemed to have been provided for and included in the unit rates and sum amount tendered such items

C2.1.9 A price or rate is to be entered against each item in the Schedule/Bills of Quantities, whether the quantities are stated or not. An item against which no price is entered will be considered to be covered by the other prices or rates in the Bills of Quantities. A single lump sum will apply should a number of items be grouped together for pricing purposes.

Service Provider Initial_____

C2.1.10 Except where rates only are required, the Tenderer shall insert all amounts to be included in his total tendered price in the "Amount" column and show the corresponding total tendered price.

C2.1.11 The units of measurement described in the Bills of Quantities are metric units. Abbreviations used in the Bills of Quantities are as follows :

ha	=	hectare	h	=	hour
kℓ	=	kilolitre	kg	=	kilogram
km	=	kilometre	kW	=	kiloWatt
km-pass	=	kilometre pass	MN	=	MegaNewton
kPa	=	kiloPascal	MN.m	=	MegaNewton-metre
ℓ	=	litre	%	=	per cent
m	=	metre	PC sum	=	Prime Cost sum
mm	=	millimetre	Prov sum	=	Provisional sum
m^2	=	square metre	No.	=	number
m^2.pass	=	square metre-pass	R/only	=	Rate only
m^3	=	cubic metre	sum	=	lump sum
m^3.km	=	cubic metre-kilometre	t	=	ton (1 000 kg)
MPa	=	MegaPascal	W/day	=	Work day

C2.1.12 The Tenderer must price each item in the Bills of Quantities in **ORIGINAL BLACK INK**.

C2.1.13 All prices and rates shall exclude value added tax (VAT). The Tenderer shall calculate value added tax and enter it at the end of the summary of the Bills of Quantities.

C2.1.14 While the Employer has every intent to complete the full scope of works, the Employer reserves the right to reduce of increase the scope of works according to the dictates of the budget, or to terminate this contract, with adjustment to the agreed rates, sums or fees and without payment of any penalty in this regard. The Service Provider shall however be entitled to pro-rata payment for all services carried out in terms of any adjustment to the Scope of Work or, in the case of termination, remuneration and/or reimbursement.

Service Provider Initial_____

C2.2: BILL OF QUANTITIES

The Construction of 2 New 2500 capacity Chicken Layer Houses at Rex Farm

Provisional Bill of quantities: Bill 1 (Preliminary & General)

					Rex Farm	
Item No.	Ref.No	Description	Unit	Quantity	Unit price Excl. Vat.	Total price Excl. Vat.
1	SANS 1200A	**Preliminary and general**				
1.1	8.3.2	**Facilities for contractor** **Site Establishment** **Includes Site Office, Housing and Toilet facilities, spillage kits and demarcated disposal areas to be established on site according to OHS ACT and EIA regulations** **Please note item 1.1 to item 1.2, proof of establishment for the duration of the contract on above must be physically on site, otherwise the claimed amount would be forfeited. Proof of agreement for the use of water and electricity on the farm between contractor and farm owner must be submitted.**	sum	1		
1.2		On completion of the contract the service provider must remove and clean Contractors Establishment to the satisfaction of Project Leader.	Sum	1		
2		**Engineers Requirements**				
2.1		**Compliance to the OHS ACT (85/1993) and CONSTRUCTION REGULATIONS.** **1. All necessary equipment e.g. ppe, signs, barricading etc. needed to fulfil, compliance to the OHS ACT** **2. Prepare and maintain a health and safety file and plan** **3. Prepare and maintain a Environmental Management file and plan** **All safety requirements must be adhered to and be in accordance with the OHS act and EIA regulations, and must comply with all requirements of the Department of Labor, based on the Risk Assessment and the Construction Regulations 2014. All items needed to comply with the above must be included in the pricing of all items.**	sum	1		
2.2	SANS 1200A 8.4.1	Comprehensive total Insurance to the total amount of the tendered amount on this contract up to the date of issue of the completion certificate. This must include all risk, third party and political violence insurance	sum	1		
3		Security on site for the duration of the contract till the issue of final completion certificate by project leader.	month	4		
	The tendered rates shall cover for all labor, materials and construction to complete the items specified above:					
Total carried forward						
BILL NO. 1 Preliminary and general						

Service Provider Initial_____

The Construction of 2 New 2500 capacity Chicken Layer Houses at Rex Farm

Provisional Bill of quantities: Bill 2 (Construction of Sub-structure of Chicken Layer Houses)

				Rex Farm	
Item No.	Description	Unit	Quantity	Unit price Exc. Vat	Total price Exc. Vat
4	**Construction of 2x 2500 capacity chicken layer houses**				
	Chicken House Sub-structure				
4.1	**Sub-structure & Foundation**				
4.1.1	**Excavation**				
4.1.1.1	Excavate by machine in all materials for perimeter dwarf walls and column footings not exceeding 1.0 meters deep, starting from stripped levels. Return fill till line and level and compact trench base to 90% MOD AASHTO density, and all loose material around foundations. Please refer to annexure A for structure details. Stockpile of surplus material in designated area and dispose of unsuitable material to area pointed out by Farm Owner or Project Leader, within 30km radius of construction area. Trenching must include all necessary equipment needed to render the site safe this includes safety signs and notices etc. All excavation volumes to be confirmed by engineer.	m^3	38		
4.1.1.2	Import material from stockpile to backfill layer base of floor of new chicken house with 100mm of soil to designated level. Backfilling must commence in layers of 150mm layers and compacted to 95% MOD AASTHO density	m^3	85		
	Free haul on transport of material to a distance of 10km kilometers would be applicable on above items. All material must be free of any plant and organic material.				
4.2	**Concrete**				
4.2.1	The foundation must be casted with continuous reinforced concrete with steel Mesh as per SANS 10400.	m^3	38		
4.2.2	The floor must be lined with reinforced concrete slabs in 5.9 m x 2.65 m x 0.15m sections with steel Mesh per SANS 10400. Crack joints to be cut within in 24hr after casting of concrete slab. **A smooth, sloped concrete finish is required for efficient manure scraping or washing. Floor slopes 1–2% to drainage channels for cleaning and effluent management.**	m^3	130		
4.2.3	Mesh ref.193 (5.6 mm high yield)- Steel Mesh must have 47mm cover on top and the bottom of the steel and 30 mm from sides of the slab/construction joint.	m^2	840		
	Strength of concrete: 25 Mpa (Mix design to be approved by project leader before placing of concrete may commence) All formwork for concrete works must be included in concrete rates.				
	Please refer to annexure B for structure details.				
4.3	**Brickworks**				
4.3.1	Building up of foundation walls. • Double brick foundation wall 220mm • Standard clay plaster bricks 15 Mpa • Cement & River Sand: For block-laying mortar and internal and external wall plastering 10 Mpa • Foundation to be 100mm higher than NGL. • Brick force to be installed every 2nd - 3rd layer Please refer to annexure B for structure details.	m	300		
4.4	**Damp-proofing membrane**				
4.4.1	High density Damp Proof Membrane (250 micron) Plastic sheeting (250 micron polyethylene) - must be free of damages and holes that would lead to rejection of the plastic sheeting.300mm overlap on each side must be taken into account when calculating amount of plastic sheeting to be order.	m^2	840		
4.5	**Joints**				
4.5.1	Joints between the concrete slabs must be free of old concrete and dust. Application must be as per manufacturer specifications. **Sealant with Crack sealer or similar approved by Project Leader.** **All joints to be cleaned via a high pressure water pump/applicator to ensure the removal of all loose material and debris. Joints must be approved by Project Leader before filling joints with sealant commences.**	m	320		
4.6	**Curing**				
4.6.1	After treatment and curing of newly casted concrete (SABS 1200 GA, Item 5.4.7) Method statement to be approved by Project Leader.	sum	1		
4.7	**Testing**				
4.7.1	A set (6 cubes per set) of concrete strength quality tests to be done during construction by accredited laboratories(SABS 1200 GA Item 7)- 3 cubes must be tested on 7 days and 3 must be tested on 28 days after casting per set.				
4.7.1.1	Floor area	sum	2		
	Instruction will be issued by the Department on the position and frequency of the test. The contractor must include the cost of transportation of the tests. All concrete work must be compacted as per SABS 1200, Item4.3)				
	The tendered rates shall cover for all labor, relevant material/sundries, tools, equipment required to render the works complete for all the above items specified				
Total carried forward					
BILL NO. 2					

Service Provider Initial_____

The Construction of 2 New 2500 capacity Chicken Layer Houses at Rex Farm

Provisional Bill of quantities: Bill 3 (Construction of Main Structure of Chicken Layer House)

				Rex Farm	
Item No.	Description	Unit	Quantity	Unit price Exc. Vat	Total price Exc. Vat
5	**Chicken House Structure**				
5.1	Supply, deliver and erect a 40 x 10 steel structure. The erection must include but is not limited to the supply of Steel frame, wall cladding, IBR roof sheeting, insulation, crane hire, erection and finishing's etc. • Bay Sizes: bay increments of 5m. • Roof Pitch: Standard roof pitches at 7.5°, 10°, or 15° angles to manage rainwater runoff effectively. • Insulation: 50mm EPS, or 50mm PIR insulated sandwich panels. • Purpose - agricultural used - Chicken Layer House. • cladding to be 800mm on western and1894 mm on eastern side • Certified structural engineer drawings must be provided before commencement of the works. The construction must include all relevant material/sundries, tools, equipment and labor required to render the erection of the structure complete **Please refer to annexure B for structure details e.g. size, dimensions, door positions and ventilation etc.**	Sum	2		
5.3	**Walling and Ventilation**				
5.3.1	**Brickworks**				
5.3.1.1	Building up of external walls • Double brick wall 220mm • Height (Please refer to annexure B for structure details.) • Standard clay bricks 15 Mpa • Cement & River Sand: For block-laying mortar and internal wall plastering 10 Mpa • Wall Finish12.5mm Thick Gauged Cement Plaster • Brick force to be installed every 2nd - 3rd layer • Applying one coat of approved primer/bonding liquid where required. • Applying two (2) or more coats of approved quality all weather guard interior/exterior paint (paint to be washable and durable) • paint color to be confirmed by Farmer **Please refer to annexure B for structure details.**	m^2	550		
5.3.1.2	**Structural Engineer**				
	Before commencement of construction, all drawings must be approved by a Registered Structural Engineer and were necessary make appropriate changes. The structure must also be signed off by a Registered Structural Engineer after completion.	sum	1		
5.3.2	**Wire Mesh/Chicken Wire**				
5.3.2.1	For upper-wall open-sided ventilation running along the length of the structure on both sides Heavy gauge 50 x 50 x 2mm mild steel square wire mesh fixed to 5000 x 1200 mm Steel frames(length of steel frame to be same as column spacing). Steel frames to be made from 50 x 50 x 2 mm square tubing with two supports in between, and fixed to both structure columns, brickworks and cladding supports.	sum	24		
5.4	**Heavy duty poultry curtains**				
5.4.1	Waterproof woven plastic curtains (PVC Fabric) with winch/rope fro manual operation to control airflow and temperature (covering both long sides of the entire structure). Dimensions 35 740 x 1200-2000 mm (curtains can be made into section to cover the length of the chicken house)	sum	2		
5.5	**Rainwater Harvesting**				
5.5.1	150x150mm 24gauge galvanized mild steel box gutter with galvanized steel brackets at 600mm centers fixed to fascia board. (6m lengths)	sum	28		
5.5.2	75mm diameter down pipe fixed with brackets to wall at 1000mm maximum centers to a storage facility, 5 down pipes per side, length 3-4m.	sum	20		
5.6	**Facia Boards**				
5.6.1	Fascia board 150 mm fixed to rafters (6m lengths)	sum	28		
5.7	**Painting and decorating**				
5.7.1	Apply 3 coats gloss oil paint to all fascia board 200-300mm girth (6m lengths)	sum	28		
5.7.2	**Interior paint work**	m^2	462		
5.7.3	**Exterior paint work**	m^2	322		
5.7.4	**Ceiling paint work**	m^3	133		
5.8	**Top Floor Finishes**				
5.8.1	20 mm thick cement screed, smooth and washable, slope 1–2% to drainage. Cement screed to receive steel troweled finish	m^3	16		
5.9	**Doors**				
5.9.1	Access doors: Supply and install 50mm thick metal or wooden double door overall size 1800 x 2100mm high complete with heavy duty 4" hinges and locks.	No.	2		
5.9.2	Access doors: Supply and install 50mm thick metal or wooden single door overall size 900 x 2100mm high complete with heavy duty 4" hinges and locks.	No.	18		
5.9.3	Steel double security doors Quality and design to be approved by farmer or project leader	No.	6		
5.9.4	Steel single security doors Quality and design to be approved by farmer or project leader	No.	2		
	The tendered rates shall cover for all labor, relevant material/sundries, tools, equipment required to render the works complete for all the above items specified				
Total carried forward					
BILL NO.3 of Chicken Layer House					

Service Provider Initial_____

The Construction of 2 New 2500 capacity Chicken Layer Houses at Rex Farm

Provisional Bill of quantities: Bill 4 (Electrical Installation)

				Rex Farm	
Item No.	**Description**	**Unit**	**Quantity**	**Unit price Exc. Vat**	**Total price Exc. Vat**
6	**Electrical**				
6.1	**Electrical and lighting**				
6.1.1	Installation of a complete electrical system The exercise must include but is not limited to: • Connection to municipality point • Distribution Board (DB) Setup and connection • Wall chasing and fixing of boxers • Conduit reticulation • Wire pulling • Fixtures and fittings • Testing and compliance Cost to include Supply, install, test and commission, and must include all required accessories for proper installation and operation including conduits, pipes(each cable in separate conduit or pipe), cable lugs, ties etc. Upon completion and testing of the system a Certificate of Compliance (COC) must be issued by a qualified electrician.	sum	2		
6.1.2	PC Sum: breaker box at municipality connection splitting the power to all three buildings with meter boxers. All material to be approved by project leader before installation.	Sum	1		
6.1.3	Mark up for the service provider on above items.	%			
6.2	**Lighting System**				
6.2.1	Supply and installation of APPROVED surface mounted lighting fixtures with all fittings and accessories (LED Florescent T8 1.8m long lamps). Installed in 2 rows spaced 4m apart and fixtures every 8m apart on automated timers.	No.	34		
6.2.2	Supply and installation of 20w LED spot lights with day and night switch. Position to be discussed and approved by project leader	No.	18		
6.2.3	250w Infra-red heat lamp (Pyrex type) complete with lamp holder,	No.	18		
6.2.4	Double light switchers wired for one and two way switching	No.	13		
6.2.5	Double socket water proof plugs	No.	16		
	The tendered rates shall cover for all labor, relevant material/sundries, tools, equipment required to render the works complete for all the above items specified				
Total carried forward					
BILL NO.4 Electrical Installation					

Service Provider Initial_____

DESCRIPTION: Supply, Delivery and Construction of 2x 2500 Capacity Layer Chicken Houses with Solar Power at Rex Farm (Ganspan).
TENDER NO: NC/DALC/2084

The Construction of 2 New 2500 capacity Chicken Layer Houses at Rex Farm

Provisional Bill of quantities: Bill 5 (Water Reticulation System Installation)

				Rex Farm	
No.	**Description**	**Unit**	**Quantity**	**Unit Price Vat Excl.**	**Total Price- Vat Excl.**
7	**Building 1 - Farmer Producer Support**				
7.1	**Water related items**				
7.1.1	Supply, deliver and install complete new reticulation system. The exercise must include but is not limited to: • Connection to municipality mains • Connecting to all buildings • Wall chasing • laying of pipelines • Fixtures and fittings (taps and toilets) etc. • Testing of system etc. The installation of all water connections include but is not limited to ablution facility, kitchen, cooling systems, drinking systems, etc. **Please refer to annexure B for structure details.**	sum	1		
7.2	**Sewerage system**				
7.2.1	Supply, deliver and install new sewerage system. This will include but not limited to laying of sewerage pipes, connecting to toilets and septic tank etc. All cost must be approved by Project Leader with the presentation of applicable invoices.	sum	1		
7.2.2	Supply, deliver and install new 6000 L Septic tank. This will include, but not limited to excavation of tank hole and installation according to tank specification . Please see specification sheet in the tender document for the installation details and specifications of new 6000 L plastic sewer tanks.	No.	2		
7.3	**Bathroom**				
7.3.1	Bathroom should include a complete toilet, shower and wash basin system with all accessories (taps, toilet roll holder, towel rail, seat etc) needed to render the installation complete must be included in pricing	No.	8		
7.4	**Cooling system**				
7.4.1	Supply, deliver and install an approved water cooling misting system. System to have all required accessories for proper installation and operation.	sum	2		
7.5	**Water storage system**				
7.5.1	**Plastic storage Reservoir**				
7.5.1.1	Connection of current supply pipeline to new plastic reservoir tank and from reservoir to irrigation system, must included. see attached specifications. All additional items needed to complete connection e.g. fittings, joints, connections and brass ball valves and valves etc. must be included in pricing.				
7.5.1.2	Ball valves	sum	1		
7.5.1.3	5 000L UV resistant Tank	sum	0		
7.5.1.4	10 000L UV resistant Tank	sum	2		
7.6	**Concrete Tank Base**				
	Construction of tank platform and the installation and securing of the tank to the platform, Platform to be 500mm high, Foundation 450mm x 300mm, Wall thickness 220mm (double brick wall) and Concrete slab Backfilling must be done layers of 150mm and compacted to 92% MoD AASHTO Reinforcing Ref.193 (5.6 mm high yield) - Steel Mesh must have 75mm cover on the top and the bottom of the steel and 30 mm from sides of the slab/construction joint				
	Strength of concrete: 25 Mpa (Mix design to be approved by project leader before placing of concrete may commence) All formwork for concrete works must be included in concrete rates.				
7.6.1	**Tank Platform with Concrete Base - 5.78m x 5.78m x 0.15m, Reinforcing 26.8m²**	sum	1		
7.7	**Pressure pump**				
7.7.1	Supply and install new 1.1 kw pressure pump. Pump must be secured to prevent theft(caged up). All relevant material needed for installation and to render the pump operational must be included in pricing (connecting to jojo tank, fittings, steel cage and electrical connection, none return valve etc.). Position to be discussed and approved by project leader	m³	1		
	The tendered rates shall cover for all labor, relevant material/sundries, tools, equipment required to render the works complete for all the above items specified				
Total carried forward to summary					

Service Provider Initial_____

SUMMARY

The Construction of 2 New 2500 capacity Chicken Layer Houses at Rex Farm		
	Description	**Amount Excl. Vat.**
	SUMMARY	
1	Preliminary and general	
2	*Ground works & Sub-structure*	
3	*Main Structure*	
4	*Electrical*	
5	*Water Reticulation*	
	SUB-TOTAL	
	15 % VAT	
	TOTAL Incl. VAT.	
	Total carried forward to Tender front page	

Project Name: Rex Farming and Trading
Funding: CASP

For Department:

Specification Committee	Name	Signature	Rank	Office	Date
Compiled:	M.C. MOBARA		ET	JK	13-11-26
Checked:	E.C Pauls		E.T	JKD	13/11/26
Checked:	T. Mmereki		C.E.T	Jan Kempdorp	13/11/2026
Approved:	Tshiamo Moncho			Kimberley	13/11/2026

For bidder:

Signature(s) .....

Name(s) .....

Capacity .....

For the bidder .....
(Name and address or organisation)

Date .....

Service Provider Initial_____



PART C3 : SCOPE OF WORK

C3.1 Description of the Works

C3.2 Engineering

C3.3 Procurement

C3.4 Construction

C3.5 Management

C3.6 Occupational Health and Safety Specification

C3.7 Environmental Management

C3.8 Annexures

Service Provider Initial_____

C3.1 : DESCRIPTION OF THE WORKS

C3.1.1 EMPLOYER'S OBJECTIVES

The employer's objectives are to provide sustainable agricultural infrastructure for on-going development.

C3.1.2 OVERVIEW OF THE WORKS

The works include Supply, Delivery and Construction of 2x 2500 Capacity Layer Chicken Houses at Rex Farm (Ganspan) This would include the de-bushing of the site, demolishing of existing old structures, trenching of footings and foundations, erecting of steel structure, pouring of concrete floor, building up of structure walls, installation of heavy duty poultry curtains, complete water reticulation and electrical systems

Contractor should make himself aware of the soil conditions for all excavation regarding hard rock on site. The contractor will have to deal with this in close proximity to other fences and buildings and allowance for such to be made in the pricing schedules.

Labour-intensive work shall be constructed using local workers who are temporarily employed in terms of this Scope of Work.

C3.1.3 EXTENT OF THE WORKS

Supply, Delivery and Construction of 2x 2500 Capacity Layer Chicken Houses with Solar Power at Rex Farm (Ganspan). will have the following works:

- Site Establishment
- Site clearance
- Trenching and Excavations
- Casting of concrete footings and foundations
- Erecting of steel structure
- Pouring of concrete floor,
- Building up of structure walls,
- Installation of heavy duty poultry curtains,
- Installation of complete water reticulation and electrical systems

Construction methods must be such that no property or life is endangered. The Employer accepts no responsibility for work that is done outside the site boundaries without the Engineer's approval.

The Contractor must program his work in such a way that no construction is to be done during the December Contractor's break and Easter weekend as set out in the Contract Data.

The compilation of the construction program and any amendments thereto during the course of construction shall be at the cost of the Contractor and shall not be measured elsewhere in this contract.

Service Provider Initial_____

C3.1.4 LOCATION OF WORKS

The site is situated in Ganspan.

The Coordinates are: [27°57'50.98"S - 24°45'35.55"E

Access to the site is via existing roads.

It is required of the contractor to familiars themselves with the area.

Refer to Annex A for a Locality Plan

C3.1.5 ABNORMAL RAINFALL

The source for rainfall statistics shall be taken as listed in WB 40 of the Weather Bureau, Department of Environment Affairs, for the determination of Rn and Nn as specified in GCC 5.12.2.2 (see Contract Data (Part 1)).
The Contractor shall keep daily rainfall records and submit them to the Engineer at every site meeting. No additional costs shall be made for the supply and installation of the rain gauge or for the keeping of the rainfall records and all costs must be included in the appropriate items.

..... Add the following to GCC 5.12.2.2

- Abnormal climatic conditions

No extension of the time for completion shall be granted on the grounds of normal rainfall conditions, but extension of time in terms of clause 5.12.2.2 of the General Conditions of Contract (2010) on the grounds of abnormal rainfall or wet conditions shall be calculated separately for each calendar month or part thereof.
See item 3.5.11 for calculation formula in order to calculate the time of completion, including any extension.

$$V = (Nw - Nn) + \frac{(Rw - Rn)}{X}$$

V = :tension of time for calendar days of the calendar month concerned. If ɜ value of V is negative and the absolute value thereof is greater than ı, V is taken as negative Nn.
Nw = :tual number of days during calendar month of construction on which a nfall of Y mm or more is recorded.
Nn = 'erage number of days in the calendar month concerned on which a nfall of Y mm or more is recorded in terms of existing rainfall.
Rw = :tual rainfall for the calendar month concerned in mm.
Rn = 'erage rainfall for the calendar month in mm deduced from existing nfall data.

Service Provider Initial_____

For the purpose of this contract the values, Nn, Rn, X and Y will be the following:
Rainfall Station :
Average Rainfall :
Average No of Days with Rainfall exceeding 10 mm :

Nn	Rn

X = 20 Y = 10

The total extension of time is the algebraic sum of the monthly totals for the period concerned. Extension of time for parts of a month shall be calculated by using pro rata values of Nn and Rn. If the algebraic sum of the monthly totals is negative, no reduction of the time for completion as a result of rainfall shall be applicable. This formula does not take any delays as a result of flood damage which may cause further or simultaneous delays into consideration and flood damage shall be treated separately for purposes of extension of time for completion. The factor (Nw – Nn) is considered as a fair allowance for deviation from the normal for the number of days on which the rainfall exceeds Y mm. The factor (Rw – Rn)/X is considered as a fair allowance for deviation from the normal for the number of days on which the rainfall does not exceed Y mm, but on which wet conditions will hamper or disrupt work.

Service Provider Initial_____

C3.2 : ENGINEERING AND SPECIFICATIONS

C3.2.1 DESIGN SERVICES AND ACTIVITY MATRIX
Works designed by, per design stage:

Concept, feasibility and overall process	Employer (Engineer)
Basic engineering and detail layout to tender stage	Employer (Engineer)
Final design to approved for construction stage	Employer (Engineer)
Temporary works	Contractor (Engineer)
Preparation of "as built" drawings	Contractor

C3.2.2 DRAWINGS

Additional construction drawings will, in terms of Clause 5.9.1 of the General Conditions of Contract (2010 2nd Edition), be issued to the Contractor by the Engineer/Employer on the commencement date and from time to time as required.

Drawing number & Title

- Drawing 1 Layout

Service Provider Initial_____

C3.2.3 CONTRACT SPECIFICATIONS

Specifications to Service Provider for the Construction of 2 New 2500 capacity Chicken Layer Houses at Rex Farm

- Concrete strength 25 MPa
- Compaction density strengh of 95% Mod AASHTO
- Plastic thickness of 250 micron.
- Steel mesh Ref. 193 – 5.6 mm diameter high yield steel mesh
- A smooth, sloped concrete finish is required for efficient manure scraping or washing.
- Floor slopes 1–2% to drainage channels for cleaning and effluent management.
- Type of joint sealant tar to be used must be approved by department Technicians
- After pouring of concrete, compaction there-of must be done with a vibrator to ensure satisfactory compaction of the concrete (eliminating air pockets and distributes the solid particles within poured concrete properly to prevent honeycombing)
- Steel mesh must not go through construction joints as indicated on the drawing layout. Provision of minimum steel cover allowance of 50 mm from bottom and side of the slab after placing of concrete. No steel must be cut before construction commence and all measurements must be confirmed on site.
- All splicing of steel must be 50 mm x diameter of the applicable steel.
- At the time of placing of concrete, all steel surfaces must free of mud, dust, oil, old concrete or other coatings which will affect the bond between the concrete and the steel. All steel not utilized as reinforcing steel for concrete must be painted with a rust free oxide paint - two layers of paint must be applied to all surface areas. Cost of rust free paint to be absorbed in the costing of all steel items.
- All Plastic membrane sheeting must have an overlap of 300mm at both sides when joining. Total overlap of 600mm.This overlap must be folded 3 times over another or joined together and then concrete may be placed on top.(Method to be approved by Department and Farm Owner)
- **ALL CRITICAL HIGHT LEVEL POINTS AND COORDINATES ON DRAWING MUST BE CONFIRMED AND ACKNOWLEDGE ON SITE. THIS MUST BE CONFIRMED BEFORE COMMENCING WITH CONSTRUCTION OF PERMANENT NATURE.**
- The Service Provider must table a request for inspection 24 hours before - placing of any concrete. The quantity, date, position and time must be recorded in the Site Instruction Book with the relevant concrete test cube numbers. No concrete works will be paid before concrete cube results for the area being invoiced is presented.
- The **Farm Owner and Department will be allowed one week (seven days) to process and confirm quantities** before the processing of payments will be done. Note payment will made within 30 Days from the confirmation of quality and quantities.

Service Provider Initial_____

- The contractor would be expected to have on the Construction Site a Site Instruction Book in triplicate. Instructions from the **Farm Owner and Departmental official/s** shall be written in the Site Instruction Book. Verbal Instructions must be recorded and signed by all affected parties. Distribution of the copies will be as follows:
    - Original copy to be handed to **Farm Owner and Department** and kept on file by both **Farm Owner and Department**.
    - One copy to be kept by Contractor.
    - Final copy to be left in the Site Instruction Book.

- A Temporary Site Office must be erected on site for the purpose of keeping a daily diary, save keeping of drawings, the contract document and the conducting of official site meetings. Furniture must include a table to accommodate at least eight delegates with accompanying chairs. Adequate provision of light and through flow of air must be highlighted in the choice of the Site Office position and layout.

- **Daily Site Diary must be kept on all construction activities as per Departments specifications and instructions. This must be handed in at the end of each contract for safe keeping in the contact file.**

- **Compulsory monthly labour and labour payment reports must be handed in with each claim for payment on the contract. On approved monthly labour and payment reports template as approved by the Department**

Service Provider Initial_____

Steel Structure
Specifications & Customization

A **35m x 10m steel structure** providing 350 square meters of covered floor space. Purpose of use, agricultural sheds, specifically for Chicken layer house. The structure must include but is not limited to:

- Main steel frame, rafters, and columns.
- Steel wall cladding and IBR roof sheeting.
- Full erection, cladding, and finishing

Bay Sizes: Lengths are typically divided into bay increments of 5m or 6m. A 35m long building easily configures into seven 5m bays.

Roof Pitch: Standard roof pitches are available at 7.5°, 10°, or 15° angles to manage rainwater runoff effectively.

Insulation: Depending on whether your structure is for cold storage, livestock, or basic tool housing, you can choose between non-insulated paneling, 50mm EPS, or 50mm PIR insulated sandwich panels.

Cladding: Cladding to be IBR roof sheeting, height 800mm on western and1894 mm on eastern sides.

Structural Engineering and Add-ons

- Certified structural engineering drawings
- Engineer to inspect and sign off on completion of the structure.
- Delivery, crane hire, and site erection to be included in pricing.

Service Provider Initial_____

SEPTIC TANK – 6000 LITRE – INSTALLATION DRAWING

(In accordance with JoJo Installation Guide – Septic and Conservancy Tank Range)

PLAN VIEW (TOP)

SIDE ELEVATION (SECTION A-A)

6000 L SEPTIC TANK – SPECIFICATIONS

Capacity	6 000 litres
Diameter	1 950 mm
Height	2 080 mm
Length	3 330 mm
Lid (each)	290 mm

MATERIALS & COMPONENTS

1. Jojo 6000 L septic tank (polyethylene)
2. Concrete (25 MPa)
3. Reinforcing steel (Y12)
4. Crusher dust / sand / gravel (bedding material)
5. PVC inlet and outlet pipes (as per design)
6. Manhole / access covers (290 mm)
7. Geotextile (optional – under gravel)

KEY POINTS

- ✓ Tank filled with sewerage only.
- ✓ No soap water.
- ✓ Biodegradation process occurs.
- ✓ Runs into a French drain.
- ✓ Tank must be placed on soil with a bearing capacity > 120 kPa.
- ✓ Do not install in water saturated clay, flood areas or where depth to bedrock is < 2.5 m.
- ✓ Follow soil classification table for suitable backfill material.

TYPICAL INSTALLATION – 6000 L SEPTIC TANK

INSTALLATION STEPS

1 EXCAVATION
- Excavate to required size (approx. 1 950 mm wide, 3 330 mm long and 2 300 mm deep – allow for bedding and backfill)
- Ensure base is level and firm.

2 PREPARE TANK BED
- For general ground (rocky soil): 150 mm crusher dust or coarse sand/gravel.
- For soft soil (sand/silt/clay): 2 layers of 150 mm each.
- For wet ground: 150 mm crushed rock (19 mm) + 150 mm crusher dust or sand/gravel.
- Compact and level.

3 PLACE THE TANK
- Lower tank onto prepared bed.
- Ensure correct orientation (inlet and outlet).
- Check levels and alignment.

4 BACKFILL
- Fill around tank with selected material (crusher dust / sand / gravel).
- Compact in layers (max. 300 mm).
- Do not use large rocks or sharp objects.

5 CONNECT PIPES
- Install 100 mm Ø inlet and outlet PVC pipes.
- Ensure proper gradient to French drain.
- Seal joints where required.

6 FINISH
- Install access covers (290 mm)
- Complete backfill to ground level
- Construct French drain/soakaway with geotextile (optional).
- Check for leaks and proper flow.

For a cleaner environment. | JoJo Septic and Conservancy Tank Range

www.jojo.co.za

Service Provider Initial_____

Service Provider Initial_____

Service Provider Initial_____

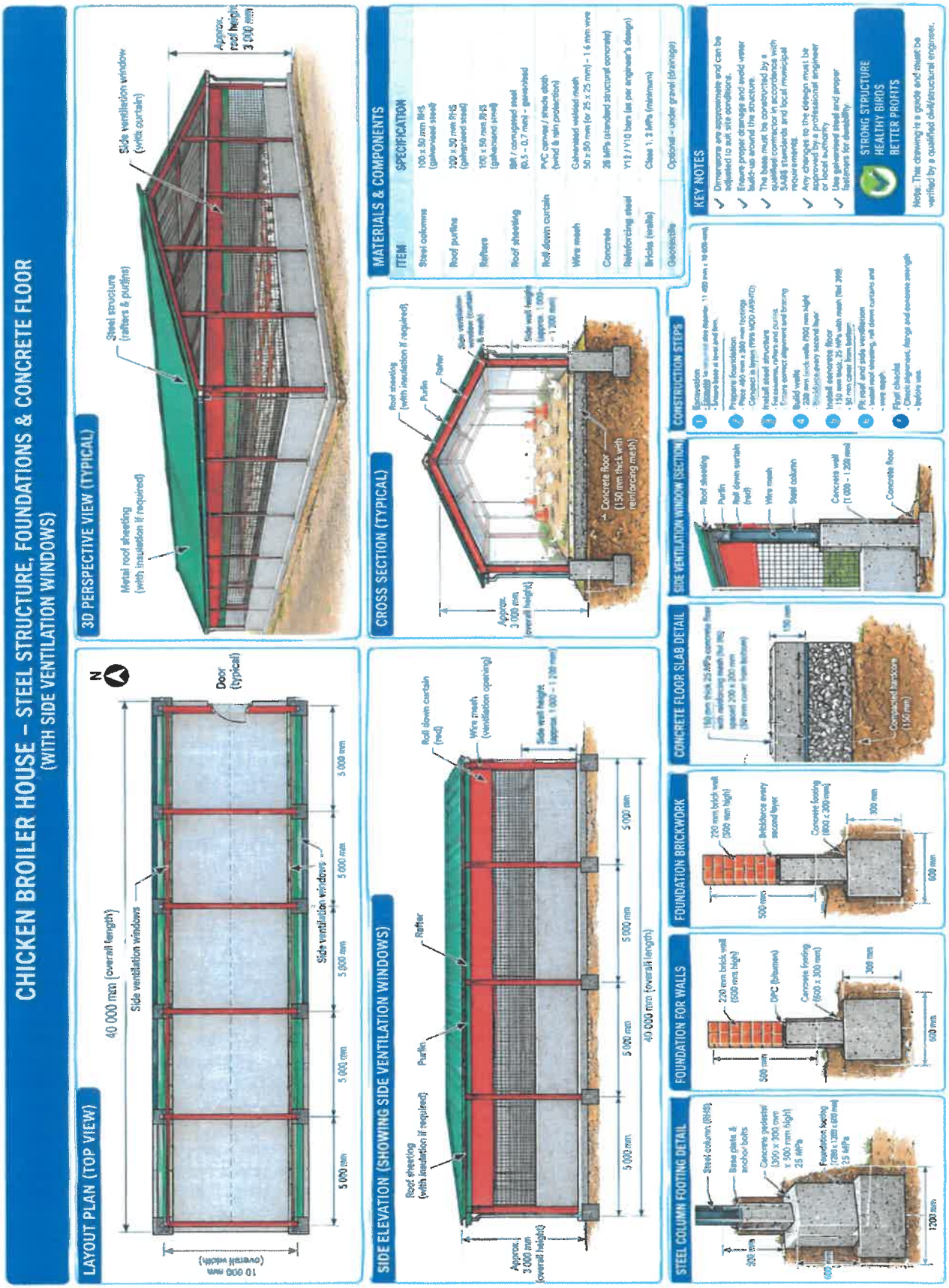

Service Provider Initial_____



Service Provider Initial_____

10 000 lt Vertical Water Tank

This is a stock item in specific colours

FRONT VIEW

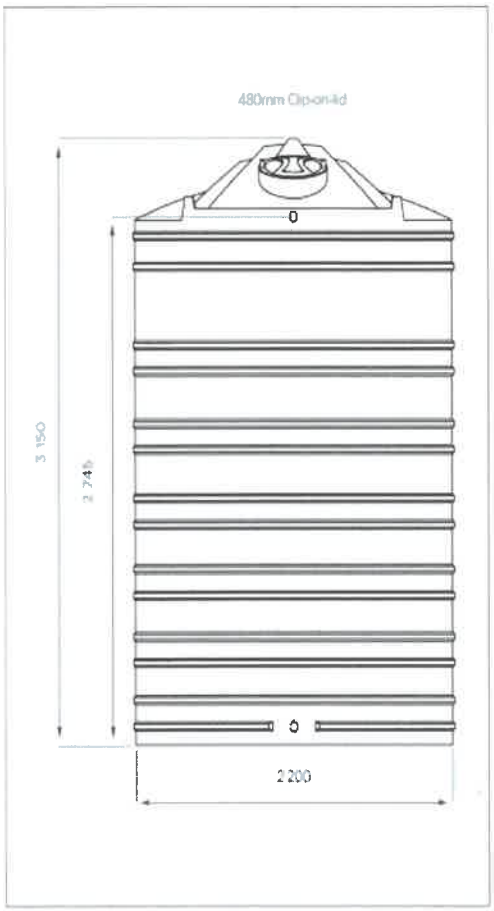

TOP VIEW

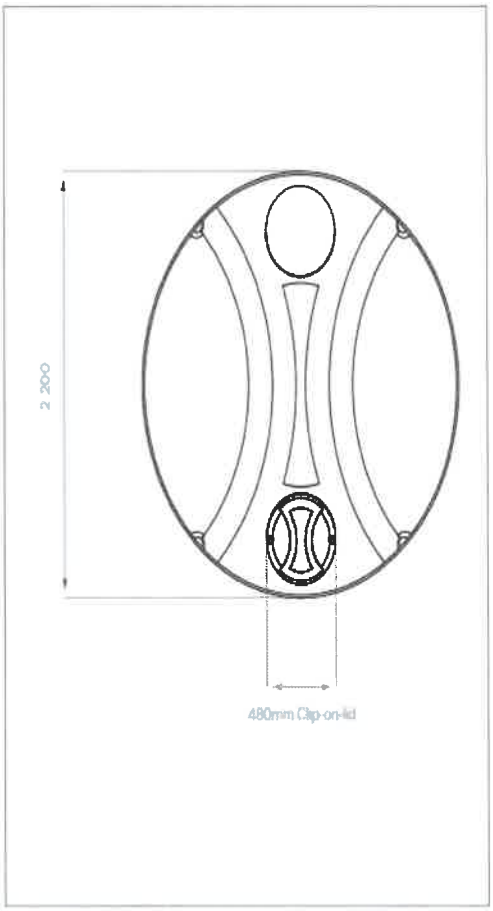

PRODUCT SPECIFICATIONS

Water	10 000 l
Inlet	40mm female water fitting
Overflow	40mm female water fitting
Outlet	40mm water fitting
Lid	480mm

Standard Colours

Stock items are subject to a 7 calendar day lead time.

Alternative Colours

These colours are available at a 14 calendar da lead time.

Note: Any colours not mentioned above can b custom manufactured at extended lead times.

10-year warranty

10 YEAR WARRANTY

- Made with the best quality virgin
- UV-stabilised outer layer
- BPA-free, food-grade layer preve leaching of harmful chemicals
- Black inner layer prevents algae g

All dimensions are in millimeters and scale is not 100% to scale. This drawing is the property of Jojo.

DECLARATION

I ,..... IN THE CAPACITY OF .....

HEREBY ACCEPT THE CONDITIONS AND SPECIFICATIONS AS STATED ABOVE

.....
SIGNATURE

Service Provider Initial_____

C3.3 : PROCUREMENT

C3.3.1 PREFERENTIAL PROCUREMENT PROCEDURES

C3.3.1.1 Requirements

The works shall be executed in accordance with the conditions attached to preferences granted in accordance with the referencing schedule.

C3.3.2 EMPLOYMENT TARGETS

Minimum local community employment

The following minimum labour-based targets must be adhered to.

Employment of local community labour

The maximum possible number of workers is to be employed from the labour lists of the currently unemployed persons in the local community.

The Contractor shall employ 80% of unskilled labourers required for the execution of the Contract locally from the local residents. The minimum wage for unskilled labourers shall be in accordance with the Basic Conditions of Employment Act, No. 75 of 1997, as published in the Government Gazette from time to time for the Civil Engineering Sector, and for the specific Magisterial District.

To this end the Contractor is required to give preference to the use of local community labour and limit the use of non-local labour to key personnel only.

Local community labour is defined as people who reside in the community and who have been identified by the Project Steering Committee and whose names appear on the labour list.

Key personnel are defined as supervisors and skilled labourers without whom a specific task cannot be executed. As far as possible these people should impart their management and building skills to individuals within the local workforce who show a keen interest and display a willingness to learn.

Must comply with the below minimum threshold where applicable.

Service provider to make use of local subcontractors as well as skilled and unskilled local labor if possible. 80% of the workforce employed by the contractor for non-specialized work must be from the local community. The successful bidder must submit signed time sheets monthly as proof for EPWP records. Where applicable

Service Provider Initial_____

Employment of women
Minimum 10% of the workforce must be women.
Employment of youth
Minimum 30% of the workforce must be youth (18 – 35 years of age).
Employment of disabled people
If available
Remuneration of local labourers

The minimum wages shall be the prescribed SAFCEC rate as set by the applicable law of the specific jurisdiction area.

C3.3.3 WORKER CONTRACTS

The Contractor will be required to enter into employment contracts with all labourers employed. All Workers Contracts for labourers employed during the month must accompany the Contractor's monthly report. The labourers must have a fixed job description that they must understand and they must acknowledge their production requirements and responsibilities.

Service Provider Initial_____

C3.4 : CONSTRUCTION

C3.4.1 WORKS SPECIFICATION

C3.4.1.1 Applicable SANS Standards

For the purpose of this Contract the latest issues of the following Standard Specifications for Civil Engineering Construction, applicable at the date of tender advertisement, shall apply -

SANS 1200 A	:	General
SANS 1200 AB	:	Engineer's Office
SANS 1200 C	:	Site Clearance (Amendment 1, 1982)
SANS 1200 D	:	Earthworks (Amendment 1, 1990)
SANS 1200 DB	:	Earthworks (Pipe Trenches)
SANS 1200 DM	:	Earthworks (Roads, Subgrade)
SANS 1200 G	:	Concrete (Structural)
SANS 1200 GA	:	Concrete (Small Works)
SANS 1200 L	:	Medium-Pressure Pipelines
SANS 1200 LB	:	Bedding (Pipes)
SANS 1200 LD	:	Sewers
SANS 1200 M	:	Roads (General)
SANS 1200 ME	:	Subbase
SANS 1200 MF	:	Base
SANS 1200 H	:	Structural Steel Works
SANS 1200 GB	:	Ordinary Building Works

The term "project specifications" appearing in any of the SANS 1200 standardised specifications must be replaced with the term "scope of work".

C3.4.1.2 Applicable National and International Standards

NOT APPLICABLE

C3.4.1.3 Particular / Generic Specifications

In addition the following Particular Specifications that are bound into this document shall apply:
Specifications PB : Building Works

SCOPE

This project specification covers variations and additions to standardised or particular specifications that are applicable to the contract.

The numbering method of this project specification deviates as follows from the method suggested in the Code of Practice SANS 1200.

Each clause with the prefix PS shall refer to the congruent clause in the appropriate section of the standardised or particular specification. Such clause shall either substitute, or supplement, or amend the clause with the same number. Where there is no such congruent clause in the standardised or particular specification, the PS clause shall be a new clause in the project specification. Any clause that is referred to in the standardised specification will also include the appropriate project specification.

Service Provider Initial_____

C3.5 : MANAGEMENT

C3.5.1 Construction Program and Methods

The Contractor shall programme the works.
The Contractor must sequence the works as follow:

1. Clear and grub
2. Excavation
3. Construction
4. Finishing Construction then Civil Works

Only one completion certificate will be issued for the project.
The Contractor shall indicate in his construction programme the number of construction teams he envisage will be required including the date when each team will start, change/activity where each team will commence from and the estimated period for which each team will be engaged.
Construction methods must be of such nature that no property or life on site or adjacent to the works is endangered. The Employer accepts no responsibility for work that is done outside the site boundaries without the Engineer's approval.

All open excavations on site must be clearly demarcated and safeguarded before it is left overnight, during weekends and on public holidays. All excavations shall be backfilled and finished to the complete satisfaction of the Engineer.

The Contractor shall program separately for the detection, exposing and modification of existing services at the start of the contract at least fourteen (14) days prior to the proposed crossings. The position and levels thereof must be recorded and forwarded to the Engineer so that any adjustments to the design can be made if necessary. No extension of time arising out of any delay in completing this work will be considered.

The Contractor shall submit within two (2) weeks after site-handover to the Engineer an updated construction program indicating all construction activities, phasing, handing over of sections, resources, timelines, monthly expenditure and critical path with specific reference to criteria in C3.5.1 for the duration of the construction period indicated for approval. The Contractor will not be allowed to commence with any work before this program has been agreed upon and approved by the Engineer.

The Contractor himself is responsible for liaison and the necessary arrangements with property owners, relevant local and road authorities, Eskom, Telkom and Neotel etc. in respect of service crossings and the finalisation and approval of the works program.
The compilation of the construction program and any amendments thereto during the course of construction shall be at the cost of the Contractor and shall not be measured elsewhere in this contract.

The Contractor shall record progress against the program. The Contractor shall draw the Engineer's attention immediately to any activities that fall behind program and shall inform the Engineer how he proposes to get back on program. Progress meetings shall be held monthly on site.

The Contractor himself is responsible for liaison with property owners with regards to the programming of construction activities through private properties and the crossing of access ways to properties at least fourteen (14) days before such construction activities commence. No additional payment will be made in this regard.

Service Provider Initial_____

The Contractor shall be responsible to inform all property and business owners by written confirmation of any road closures and the arrangements must be completed at least seven (7) days in advance. No additional payment will be made in this regard and it shall be deemed to be covered by the relevant items.

However both vehicle and pedestrian access to businesses, commercial properties and municipal and state institutions i.e. SAPS buildings, provincial clinics, traffic departments and schools must be provided at all times and arrangements for temporarily alternative parking must be discussed and arranged with the relevant businesses or institutions.

Sufficient photos of existing structures, walls and areas that have to be crossed must be taken by the Contractor and handed over to the Engineer before such operations commence. No payment will be made in this regard and it shall be deemed to be covered in the preliminary and general items.

A Mechanical and electrical contractor will be on site during the contract period. The Contractor must note that no additional payment is applicable for re-programming of the works and/or any delays that may be caused by bad co-ordination, unless otherwise agreed by the Engineer. All costs associated with liaison with the Mechanical en electrical contractor and the accommodation of the main contractor's activities on the site must be allowed for in the schedule of quantities.

Existing services shall remain in operation throughout the duration of the contract.

C3.5.2 Engineering method statements

The Contractor shall issue the Engineer with engineering method statements at least fourteen (14) days prior to the commencement of construction activities for the following:

- Method statement for: as per request from Project Leader/Engineer

The compilation of the above method statements shall be deemed to be covered in the preliminary and general items and no additional costs in this regard shall be entertained.

C3.5.3 Quality plans and control

The Contractor shall have a well-documented Quality Assurance system depicting his approach to guarantee quality control and the procedures for preventative and corrective actions in order to ensure compliance with the specified standards and requirements of this contract.
The Contractor is required to carry out his own control testing, but if he so wishes, and agrees to abide by the results of the Engineer's check test, he may dispense with his own tests. However, should the Contractor wish to use the Engineer's testing facilities, he will be charged for the various tests at the rates ruling at the time.
Any additional tests requested by the Contractor or any retests required, due to failure of the initial tests, will be charged to the Contractor at the rates ruling at the time.
The Contractor shall inform the Engineer of any control testing to be done at least 48 hours before such tests are required and must allow in his program for the time necessary for the tests and the processing of the results thereof.

C3.5.4 Products and materials used

All products and materials used that forms part of the permanent works of this contract shall comply with the applicable SANS standards.

Service Provider Initial_____

C3.5.5 Recording of weather

The Contractor shall erect a rain gauge on site or agree with the Engineer to use statistics from an approved weather station in the area.
The Contractor shall record any rainy and windy periods which may adversely affect the contractual time of completion in terms of Clause 5.12 of the General Conditions of Contract (2010).

C3.5.6 Format of communications

All communications regarding the contract shall be channeled through the Engineer and/or his duly authorized representative.
The Contractor shall supply a site instruction book (triplicate) which must be available on site at all times. The site instruction book forms part of the official contract documentation.
A "Progress Report", "Labour on Site" and "Plant on Site" must be submitted at each site meeting.

C3.5.7 Management meetings

Management (site) meetings shall be held once a month for the duration of the project on times and dates to be agreed.
Technical meetings shall be held once a month for the duration of the project on times and dates to be agreed.
Health and Safety management meetings will be arranged by the appointed Health and Safety Officer (HSO) for the duration of the contract.
Environment management meetings will be arranged by the appointed Environmental Control Officer (ECO) for the duration of the contract.

C3.5.8 Payment certificates

The date of measurement of the monthly payment certificate will be agreed at the first site meeting. All quantities must be agreed with the Resident Engineer/Clerk of Works before a payment certificate is submitted.

C3.5.9 SITE ESTABLISHMENT

C3.5.9.1 Services and facilities provided by the Employer

- Source of Water Supply

  The Contractor may make application to the Local Authorities/Farm Owner for a clean water supply point, but shall bear all the costs for the installation of such supply point. Water used by the Contractor from the Employer's mains will be charged for at the tariffs ruling at the time of use.
  The Contractor shall make himself thoroughly acquainted with the regulations relating to the use of water and shall take adequate measures to prevent the wastage of water.
  The Employer accepts no responsibility for the shortage of water due to any cause whatsoever, nor additional costs incurred by the Contractor as a result of such shortage.
  The Contractor shall take note that no direct payment will be made for any costs incurred for the provision of a water supply point nor for the cost of water drawn. Payment for the aforementioned shall be deemed to be covered by the rates and prices tendered and paid for the various items of work included under the Contract.

Service Provider Initial_____

- Source of Power Supply

  The Contractor is to make his own arrangements with the Electrical Service Provider/Farm Owner for electricity supply, if required, and shall pay establishment and consumption costs at the tariffs ruling at the time.
- Location of Site Camp, Materials Storage and Temporary Stockpiling Area

  The position of the site camp, designated area for materials storage and temporary stockpiling shall be submitted to the Engineer for approval.
  The Contractor shall confine his camp and storage of materials to the designated areas. On completion of the construction works the surface of the areas utilised shall be re-instated to the original state.

C3.5.9.2 Facilities provided by the Contractor

- Sanitary Facilities

  The Contractor shall supply chemical toilets for use by his works. The number of toilets shall be based on one toilet per fifteen (15) personnel on site.
  Under no circumstances will the Contractor's staff be allowed to use public toilet facilities.
- Housing for Contractor's employees

  No housing is available for the Contractor's employees, and the Contractor shall make his own arrangements for housing his employees or transporting them to and from the site. The Contractor is in all respects responsible for the housing and transporting of his employees, and for the arrangement thereof, and no extension of time due to any delays resulting from this, will be granted.
- Advertising rights

  The Contractor will be permitted to erect a maximum of two (2) of his own name boards in positions approved by the Engineer. The Engineer reserves the right to order the removal of these boards if they are not kept in good repair.

C3.5.10 PERMITS AND WAY LEAVES

The Contractor shall obtain the necessary permits and way leaves from the relevant authorities before any construction work may commence. The Employer/Engineer will provide the necessary drawings for the application of the permits and wayleaves.

The Contractor must allow in his preliminary and general rates for the costs to obtain the permits and wayleaves, as well as in his construction programme.

Service Provider Initial_____

C3.6 : OCCUPATIONAL HEALTH AND SAFETY SPECIFICATION

The contractor and any subcontractor, his/her management and/or any of his/her personnel must comply to all the regulations as shown in the Occupational Health and Safety Act, 1993 and Construction regulations, 2014 before any access to the site may be granted by the employer or the employers agent. These regulations must be submitted in writing to the Department of Agriculture, Environmental Affairs, Rural Development and Land Reform.

In compliance with the construction Regulations the contractor shall, after performing a risk assessment, prepare a health and safety plan for approval by the employer or the employer's agent which will be kept and maintained on site by the contractor for the full duration of the works.

- The health and safety plan shall include, but not be limited to, the following:
- The safety management structure including the names of all designated persons such as the construction supervisor and any other competent persons,
- Safety method statements and procedures to be adopted to ensure compliance with the Occupational Health and SAFETY Act, 1993 (Act No 85 of 1993)
  Aspects to be dealt with shall include, but not be limited to:
  - Public vehicular and pedestrian traffic accommodation measures
  - Control of the movement of construction vehicles
  - The storage and use of materials
  - The use of tools, vehicles and plant
  - Temporary support structures
  - Dealing with working at heights
  - Excavations
  - Confined space
  - Environmental conditions and safety requirements in working hazardous materials including asbestos cement products
  - Security, access control and the exclusion of unauthorised persons.
- The provision and use of temporary services
- Compliance with way-leaves, permissions and permits
- Safety equipment, devices and protective clothing to be employed
- Emergency procedures
- Provision of welfare facilities
- Induction and training
- Provision and maintenance of the health and safety file and other documentations
- Arrangements for monitoring and control to ensure compliance with the safety plan during execution of the works

Service Provider Initial_____

C3.7 : ENVIRONMENTAL MANAGEMENT

C3.7.1 Environmental Management Plan

C3.7.1.1 Demarcation of the site

For the purpose of the EMP, the site shall be divided into two areas identified by the Engineer and the Contractor:

1. The construction camp comprising all buildings, hostels, offices, lay down yards, vehicle wash areas, fuel and material storage areas, batching areas and other infrastructure that is required for the running of the job.

2. The working area in which construction activity is permitted to take place. No infrastructure, permanent lay down or storage areas shall be established in this working area unless specified in the project specification or prior approval is obtained from the Engineer.

C3.7.1.2 Construction camp

The Contractor shall provide the Engineer with a plan showing the positions of all buildings, yards, vehicle wash areas, batching areas and other infrastructure for approval by the Engineer at least ten (10) days prior to the commencement date. The construction camp shall be planned in such a way so as to affect as small an area as practically possible. The Engineer shall approve the location and layout of the construction camp prior to establishment.

C3.7.1.3 Fencing of the site

If a temporary fence is required, the Contractor shall erect and maintain such a fence (demarcating the boundary of the working area, construction camp and access roads) to the satisfaction of the Engineer. The erection of this fence shall be one of the first tasks undertaken by the Contractor after the commencement date. The boundaries between the construction camp area and the working area within the site shall also be fenced. The Contractor shall ensure that the erection of the fencing causes minimal disturbance to flora, fauna, natural, historical and cultural features. A method statement shall be submitted to the Engineer prior to erection to ensure proper positioning of the fence.

All material left over from fencing operations shall be collected after the fence has been erected and removed from site. Fences shall not be moved or removed without the written consent of the Engineer. The Contractor throughout the construction period shall maintain fences.

C3.7.1.4 Workshops

Any workshops shall be located inside the demarcated construction camp area. The exact location and design of the workshop shall be as approved by the Engineer prior to establishment. The workshop shall have a smooth impermeable (concrete) floor. The floor shall be bunded and sloped towards an oil trap or sump to contain any spillages of substances (e.g. oil). When servicing equipment, drip trays shall be used to collect the waste oil and other lubricants. All waste material shall be disposed of in accordance with national, regional and local laws, regulations and by-laws. This waste material shall be regularly removed off site and disposed of at an approved waste site.

Service Provider Initial_____

C3.7.1.5 Eating areas

The Contractor's employees shall eat in the designated eating area indicated on the Contractor's drawing of the construction camp that has been approved by the Engineer. No changes to the eating area shall be made without the approval of the Engineer. The Contractor shall provide shade and adequate scavenger-proof and weatherproof refuse bins in this area. Any cooking on site shall only be undertaken in the eating area and be done on well-maintained gas cookers with fire extinguishers present. No cooking shall be done anywhere else on site and no fires are permitted.

C3.7.1.6 Watchmen

The Contractor shall ensure that a watchman is present on site during all non-working hours, including public holidays unless otherwise agreed with the Engineer to ensure the safety of sensitive areas.

C3.7.1.7 Ablution facilities

The exact location of the toilets shall be as approved by the Engineer. The Contractor shall provide toilets and shall be responsible for their maintenance and servicing on a daily basis. The contractor shall ensure that no spillage occurs when the toilets are cleaned or emptied. Burial of waste from toilets on site is strictly prohibited. The toilets shall be maintained in a clean state. Performing ablutions anywhere other than in toilets is strictly prohibited. Leaking toilets shall be repaired immediately or removed from site.

C3.7.1.8 Solid waste collection areas

"Solid waste" refers to all solid waste, including construction debris, chemical waste, excess cement/concrete, wrapping materials, timber, tins and cans, drums, wire, nails, food and domestic waste (e.g. plastic packets and wrappers).

The Contractor shall set up a waste control and removal system. The Contractor shall submit a method statement for waste control and removal to the Engineer for approval prior to commencement. Bins shall be closed, weatherproof and scavenger-proof.

Waste shall be collected from these bins on a daily basis and shall be stored in a central collection area prior to removal off-site. This central collection area shall have appropriate storage containers (closed and weatherproof) bunded and lined with plastic or concrete. The waste from this central collection area shall be disposed of off-site at an approved waste site. Waste shall be removed from site on a regular basis as approved by the Engineer. Waste shall not be burnt or buried on site or in the surrounding area. Where possible, appropriate material shall be reused or recycled.

C3.7.1.9 Wastewater

Water shall be used sparingly on site and where possible wastewater shall be recycled. A wastewater management plan shall be submitted to the Engineer for approval 10 days prior to commencement date. This management plan shall detail the expected extent of contamination of each wastewater stream and how the Contractor plans to deal with each wastewater stream.

Service Provider Initial_____

C3.7.1.10 Fuel storage areas

Fuels required for use during construction shall be stored in a depot at the construction camp at a location as agreed upon by the Engineer. The Contractor shall ensure that all liquid fuels (petrol and diesel) are stored in tanks with lids, which are kept firmly shut. The tanks shall be situated on a smooth impermeable (plastic or concrete) base with an earth bund. The impermeable lining shall extend to the crest of the bund and the volume inside the bund shall be 1,5 x the total capacity of the storage tanks. The bunded area shall be emptied of water following rainfall events. The floor of the bund shall be sloped towards an oil trap or sump to enable any spilled fuel and / or fuel-soaked water to be removed.

The Contractor shall keep fuel under lock and key at all times.

C3.7.1.11 Concrete batching area

Cement and concrete are regarded as hazardous to the environment due to the high pH of the material and the chemicals it contains.

The Contractor shall submit a method statement for mixing of concrete for approval by the Engineer indicating where the mixing will take place and the methods to ensure that waste water and materials are contained in the batching area and disposed of correctly. Concrete shall not be mixed directly on the ground.

C3.7.1.13 Equipment maintenance and storage

All vehicles and equipment shall be kept in good working order and serviced regularly. Leaking equipment shall be repaired immediately or removed from the site. Where possible, all maintenance of equipment and vehicles shall be performed in the workshop. If it is necessary to do maintenance outside of the workshop area, the Contractor shall obtain agreement from the Engineer prior to commencing activities.

The Contractor shall demarcate an area in which equipment and vehicles may be stored. The location of this area shall be as approved by the Engineer. The Contractor shall take measures to ensure that there is no pollution of this storage area by leaks or drips.

C3.7.2 Materials handling, use and storage

The Contractor is responsible for ensuring that any material delivery drivers are informed of all procedures and restrictions (e.g. which access roads to use, "no go" areas, speed limits, dust control, etc) required to comply with the EMP before they arrive at site and off load any materials. The Contractor shall ensure that the delivery drivers are supervised during off-loading by someone with an adequate understanding of the requirements of the EMP, so as to ensure that all relevant requirements of the EMP are followed.

C3.7.2.1 Hazardous Substances

The Contractor shall comply with all relevant national, regional and local legislation with regard to the transport, use and disposal of hazardous materials.

The Contractor shall provide the Engineer with a list of all hazardous materials to be used on site, together with the storage, handling and disposal procedures of the materials. This information shall be available to all personnel on site.

The location of the hazardous material store shall be within the demarcated construction camp area. The location and design of the store within this area shall be approved by the Engineer prior to establishment.

Service Provider Initial_____

C3.7.2.2 Fuel (Petrol and Diesel) and Oil

Where possible, the Contractor shall ensure the refuelling of vehicles takes place only at the fuel storage area in the construction camp. Where this is not possible, the Contractor shall notify the Engineer to get his approval of the refuelling method to be used. The surface under the refuelling area shall be protected against pollution to the satisfaction of the Engineer prior to any refuelling activities. All equipment that leaks shall be repaired immediately or removed from the site. Refuelling shall be carried out by means of pumps, rather than funnels.

C3.7.3 Emergency procedures

The Contractor shall ensure that emergency procedures for the following situations are submitted for approval to the Engineer prior to establishment of the site.

C3.7.3.1 Fire

The Contractor shall advise the relevant authority of a fire as soon as one starts and shall not wait until he can no longer control it. The Contractor shall ensure that his staff and the staff of Subcontractors are aware of the procedure to be followed in the event of a fire.

C3.7.3.2 Accidental leaks and spillages

The Contractor shall ensure that his staff and the staff of Subcontractors are aware of the procedure to be followed for dealing with spills and leaks, which will include notifying the Engineer and relevant authorities. The Contractor shall also ensure that the necessary materials and equipment for dealing with spills and leaks are present on site at all times. The clean up of spills and any damage caused by the spill or leak shall be for the Contractor's account. The Contractor shall submit a method statement for management of accidental leaks and spillage's of any liquid material to the Engineer for approval.

C3.7.3.4 Care of surrounding areas

The Contractor shall ensure that no contamination of or damage to the surrounding areas or watercourses shall occur as a result of any of his activities during construction.

Care shall be taken to ensure no accidental spillage or leakage occurs whilst temporary bypass facilities are in use. Should any spillage or leakage occur the Contractor shall immediately stop his operations and clean up the spillage. He shall then rectify the cause of the spillage or leakage before proceeding further to ensure that no further spillages occur.

The clean up of spillage and any damage caused by the spillage or leakage shall be for the Contractor's account. The Contractor shall submit a method statement for management of accidental leaks and spillages of any sewage to the Engineer for approval.

The Contractor shall ensure that no pollution of the surrounding areas occurs due to wind-blown or other litter emanating from the site or from his activities during construction. No fires are permitted, neither is the cutting down of or any damage to trees and other vegetation (especially Camel Thorn Trees) outside of the demarcated site.

Service Provider Initial_____

C3.8: ANNEXURES

Service Provider Initial_____

ANNEX A: LOCALITY PLAN

Locality **Plan** (Google Earth Plan View)

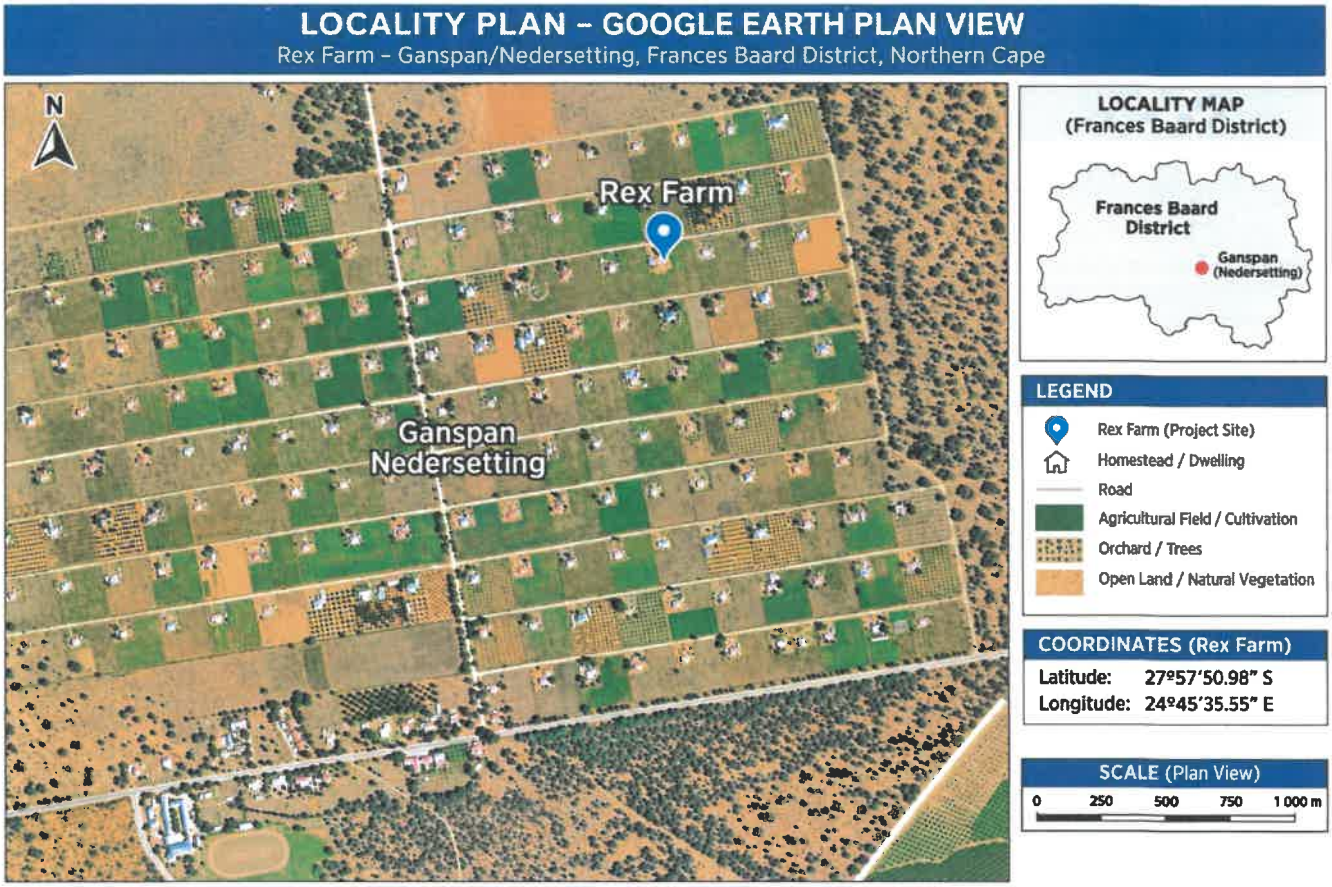

Service Provider Initial_____

ANNEXURE B: DRAWINGS

- Drawing 1 Layout

Service Provider Initial_____

Service Provider Initial_____

Service Provider Initial_____

PART C4 : SITE INFORMATION

Service Provider Initial_____

C4: SITE INFORMATION

C4.1 SCOPE

The documentation included in this section describes the site as at the time of tender to enable the tenderer to price his tender and to decide upon his method of working and programming.

Only actual information about physical conditions on the site and its surroundings has been included in this section and interpretation is a matter for the tenderers.

C4.2 SUBSOIL INVESTIGATIONS

No formal geotechnical investigation has been done on this project. Prospective tenderers shall acquaint themselves with the nature of the materials found on site. Certain portions of the total excavation may have to be done by mechanical breakers and / or blasting.

No claims whatsoever that may arise because of unforeseen ground and subsoil conditions will be considered. **It is the responsibility for the Contractor to ascertain for himself the nature of the ground and subsoil as well as the conditions on site.**

It is the Contractor's responsibility to supply and deliver all materials that comply with the minimum standards as well as for the building and maintaining of access roads to the works on site, haul areas or dumping sites. No additional payment will be applicable to the above-mentioned other than the relevant items in the schedule of quantities.

Service Provider Initial_____